SLEWING RING BEARINGS,

RING GEARS

& TRAILER RINGS

QCB® is a registered trademark of NBC Group Ltd

Catalogue QCB® RS 2013

QCB® Slew rings are represented in Canada by

Global Bear Inc. (Head Office)

2064 Chartier Avenue
Dorval
Quebec
Canada H9P 2H1

Phone : 514-631-1110
Toll free : 866-631-1110
Fax : 514-636-7737

Global Bear Inc.

1601 Matheson
Mississauga
Ontario
Canada L4W 1H9

Phone : 905-624-0612
Toll free : 877-820-4865
Fax : 905-624-1086

Web : www.globalbear.ca

In the interests of continued improvement, NBC Group Ltd reserves the right to modify any product or specification without prior notice. All weights and measures are approximate and for guidance only.

©Copyright NBC Group Ltd

Any reproduction or unauthorised use of this material is strictly prohibited without prior approval in writing from NBC Group Ltd.

QCB® is a registered trademark of NBC Group Ltd

TABLE OF CONTENTS

- Introduction 3
- Definitions 4
- Types of slewring ring bearings 5
- Selection of slewring rings 8
- Installation data 9
  - Transport, handling and storage
  - Support structures
  - Orientation
  - Fastening bolts
  - Seals
  - Gearing
  - Operational clearance and wear
  - Lubrication
- The QCB® slewring ring numbering system 16
- Dimension tables
  - Metric series
    - Flanged ring 20mm ball 17
    - Flanged ring 32mm ball 22
    - Solid ring 20mm ball 27
    - Solid ring 14mm roller 32
    - Solid ring 25mm ball 37
    - Double row ball bearings 42
    - Other stock rings (all types) 47
  - Trailer rings 65
- Design Data Sheet 69

Other catalogues in the QCB ® large diameter bearing range

- QCB® Slewing rings (Imperial sizes)
- QCB® Slew Drives are covered by other

NBC Group offers one of the widest ranges of slewing rings, slew drives and ring gears available from any single supplier, and markets them under its own brand name of QCB® Slew Rings & QCB® Slew Drives

The range includes:-

- Single row ball bearings
- Double row ball bearings
- Single row crossed roller bearings
- Triple row roller bearings
- Ring gears and pinions
- Slew drives

Information on our stock range of trailer rings is also included.

This catalogue showcases a standard range of product: the complete range is far larger, backed by an interchange and database of over 6000 drawings, as well as the ability to design new, application specific units.

For the manufacture of QCB® slewing rings and QCB® slewing drives, NBC Group uses only select manufacturers in China, Europe and elsewhere to ensure that our clients enjoy a quality product at a competitive price, all delivered when required.

All manufacturers have been audited by NBC's engineering staff and are ISO registered. They operate some of the most modern machinery and manufacturing processes in the world, comparable with traditional sources. Many have passed additional and separate audits from some larger clients who operate safety critical equipment in the global market place.

The QCB® brand and NBC Group have become trusted names in slewing ring bearings with a satisfied and international customer base in industries as diverse as mining, materials handling, offshore oil and gas, access platforms and process treatment plants (to name a few!)

For more information visit our website on www.nbcgroup.co.uk which is updated regularly!

NBC Group Ltd

Orleton Lane, Wellington, Telford, TF1 2BG, Shropshire, England
Phone: +44 (0) 1952 222300
Fax: +44 (0) 1952 242938
e-mail: technical@nbcgroup.co.uk or slewingrings@nbcgroup.co.uk

DEFINITIONS

TRAILER RINGS

Low precision large diameter bearings intended for articulation of slow speed trailer axles. Manufactured in mild steel only and usually unsealed.

SLEWING BEARINGS

Large diameter rolling bearings that can accommodate axial, radial and moment loads in combination while rotating or making oscillatory motions.

Slewing rings consist of 2 or 3 rings between which either ball or cylindrical rolling elements are arranged with suitable spacers. The rings incorporate mounting and handling holes, and sometimes a gear on either. Standard NBR seals prevent contamination of the raceway lubricant.

Compared to traditional pivots that require 2 bearings with some degree of separation, slewing rings provide an elegant and compact solution to problems of rotation, and have found application in

- Access platforms
- Conveyor booms
- Cranes of all types
- Ladle turrets
- Offshore winches and umbilicals
- Stackers
- Bottling machines
- Wind turbines
- Process equipment
- Materials handing
- Carousels

SLEW DRIVES

Increasingly popular, slew drives consist of a slew ring mounted on a base plate that incorporates a worm shaft that engages the external gear.

Hydraulic or electric motors are used to provide rotation.

Slew drives are easy to install and are becoming increasingly popular in

- Solar tracking equipment
- Access platforms
- Forklift attachments
- Vehicle steering systems

QCB Slew drive

RING GEARS

Rings gears are single toothed rings, easily made in slewing ring factories. They find application in

- Winches
- Umbilical reels
- Carousels

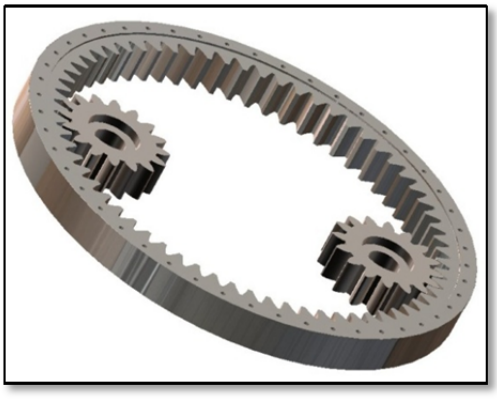

Ring gear and pinion set

TYPES OF SLEWING RING BEARINGS

The QCB® range of slewing rings consists of:-

- 56mm Flanged (light) 20mm series *(20mm ball, 56mm section height)*
  A modular set of bearings from ~486 to ~1200mm diameter suitable for general and lightly loaded applications

- 56mm Solid section 20mm series *(20mm ball, 56mm section height)*
  A modular set of bearings from ~486 to ~1200mm diameter suitable for medium load applications

- 56mm Solid section X14 series *(14mm x-roller, 56mm section height)*
  A modular set of bearings from ~486 to ~1200mm diameter suitable for medium load applications

- 90mm Flanged 32mm series *(32mm ball, 90mm section height)*
  A modular set of bearings from ~1100 to ~1600mm diameter suitable for medium load applications

- 80mm Standard 25mm series *(25mm ball)*
  A modular series of bearings from ~900 to #1600mm diameter for high torque applications

- Double row ball slew rings
  For high radial load applications or where support structure stiffness is inadequate

- Heavy section ball and crossed roller bearings

- Triple row roller bearings
  For applications with extremely heavy loads and tilting moments

- Others/ Specials
  - Combined cylindrical roller/ ball slew rings
  - Wire race bearings & Triple ring bearings

HEAVY SERIES SLEW RINGS

A further range of heavy duty ball, double row ball, crossed roller slewing rings to 1.8m diameter is stocked, many of which are interchangeable with bearings from other respected and well-known manufacturers, (some of whom are no longer in business).

INA
FAG
LA LEONESSA
ROLLIX DEFONTAINE
AVON
TAPEREX
BRB
ROSSI
TORRIANI GIANNI
ROTH ERDE
DRECON

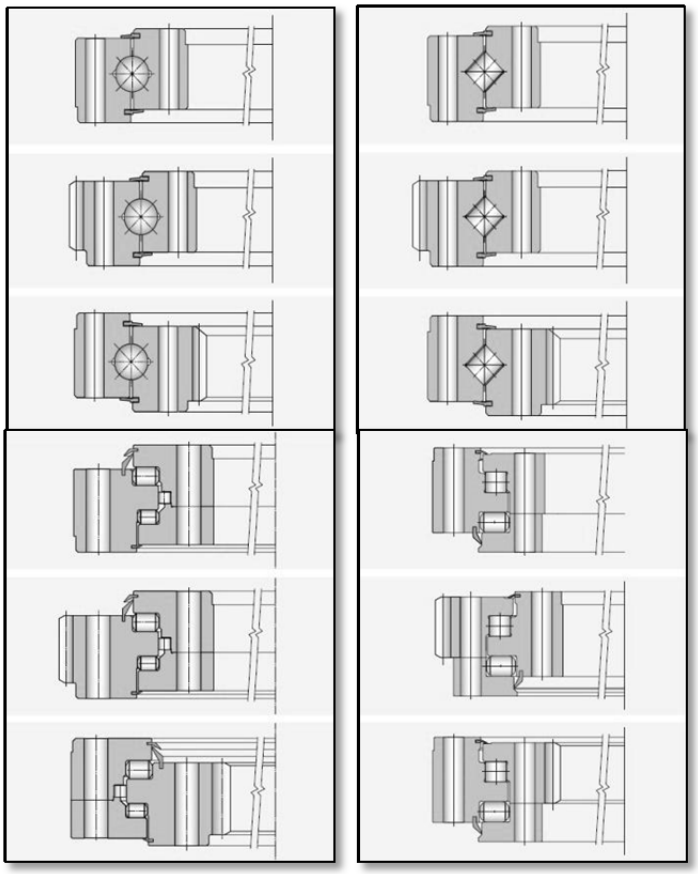

FAG
KAYDON
PSL
GALPERTI
RIMA
IMO
ROTIS
ROTH ERDE
RKS / SKF
ROBALLO

Slew ring styles and other brand names

Larger bearings, axial/radial combination bearings and all triple row roller bearings are manufactured to order only.

Our factories have the ability to produce to > 8 000mm diameter and we will arrange delivery anywhere in the world!

Contact slewingrings@nbcgroup.co.uk with your requirements.

Slew rings for an offshore wind-turbine foundation drilling rig

Slew ring for a ship mounted heave compensated access platform

Other notable projects include:-

- Very large geared slew rings for an offshore wind turbine gearbox test rig
- Externally geared slew rings for onshore cable carousels
- Slew rings for ROV launch and recovery systems
- Ring gears and pinions for a 32m vertical spooler
- Slew rings for winches used in the Antarctic ice survey
- Slew rings in the window washing machines in the Shanghai World Financial Centre
- Replacement slew rings for high speed bottling machines
- Airship mooring systems

No requirement too small or project too large for you to get immediate assistance!

SELECTION OF SLEW RING TYPE

Selecting the appropriate slewing ring must take into account such factors as

- Dimensional constraints
- Magnitude & direction of loads
- Expected life
- Vibration
- Bolt capacity
- Required accuracy
- Environment
- Operating speed
- Sealing
- Gear strength requirements
- Lubrication

It is beyond the scope of this catalogue to provide detailed selection advice.

Project details should be entered on the Design Data Form (see rear of catalogue) and sent in by email or fax to the technical department, along with a sketch, CAD, 3D model or photos of your application and get our experts involved!

Using state of the art software and traditional rolling bearing theory our engineering staff will select an appropriate slew ring and issue a full design report, together with a detailed gear analysis (if required) – all without charge!

If a standard catalogue bearing is not suitable for your needs, we will design a bearing that is. Unlike many large companies we do not turn low volume business away

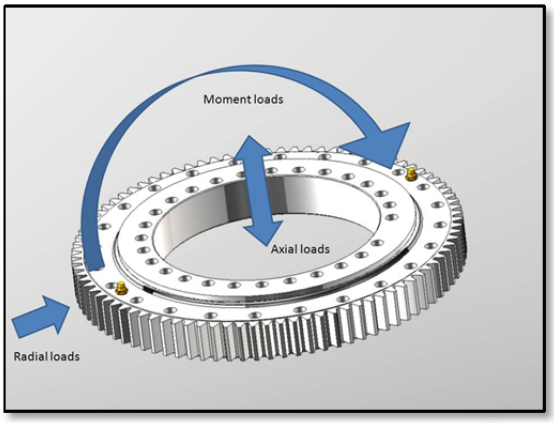

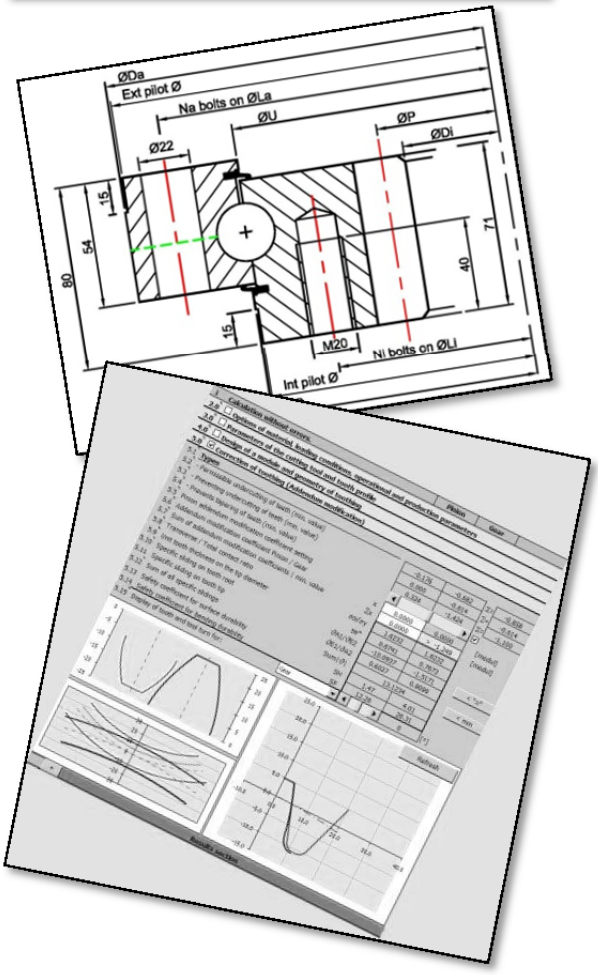

Slew ring loading and analysis

INSTALLATION DATA

TRANSPORT, HANDLING & STORAGE

Slewing rings should be transported and stored in a horizontal position or on specially built incline cradles. Shock loads should be avoided as they may damage the raceways.

If stacked on pallets then care must be taken not to dislodge seals or grease fittings during movement. Wooden or runner spacers would be of benefit between bearings. Gear teeth must be protected from impact damage.

As supplied, slewing rings are generally packed for storage in a dry, covered store and for a period not exceeding 6 months.

Light surface corrosion may occur in humid conditions but this can usually be removed from external surfaces – it's is more important that the raceways are well greased and rust free.

In extreme cases of long term storage the bearings may need professional dismantling and cleaning/ inspection / reassembly before use.

Large slewing rings usually have lifting holes for eye-bolts to assist lifting in the inner and outer rings. Check the weight of the ring to ensure slings and/or chains are of sufficient capacity.

When unwrapping, care must be taken not to cut and damage the integral seal strips. Use of a blunt instrument to free any seal surfaces that may have become stuck to the running surface is recommended to avoid seal damage on start-up.

Standard commercial solvents (without chlorine) can be used to degrease the slewing rings if required. Use sparingly and do not let this work under the seals into the raceway area.

SUPPORT STRUCTURES

Slewing rings must be supported by flat, machined surfaces which are rigid enough to eliminate torsional buckling under load that would affect the smooth operation of the ring.

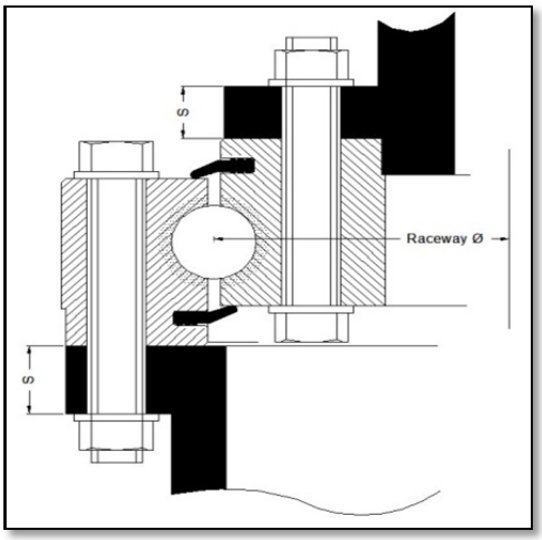

Support structure thickness

The suggested minimum thickness (S) of the supporting material is indicated below.

Raceway ϕ (mm)	500	750	1000	1250	1500	2000	2500	3000
Min. thickness (mm)	25	30	35	40	50	60	70	80

The width of the supporting flanges must at least equal the width of the ring it supports. Thick circular supports are preferred over thinner supports with reinforcement ribs.

With modern finite element analysis it may be possible to work with thinner materials.

Flatness defects under load must not exceed the values indicated below to avoid tight spots or seizure; both of which will reduce the life of the ring.

Raceway ϕ (mm)	500	750	1000	1250	1500	2000	2500	3000
Single row ball (mm)	0.12	0.18	0.21	0.25	0.28	0.33	0.38	0.42
X-roller or 2-row ball (mm)	0.10	0.12	0.15	0.18	0.20	0.25	0.29	0.32

These values are for “long waves” around the circumference. Shorter wave defects (e.g. between 2 bolt holes) must not exceed ¼ of these values.

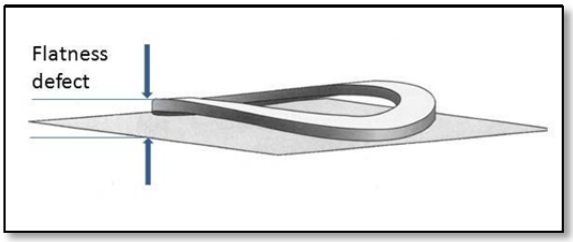

Support structure flatness

Defects in the radial direction (sometimes referred to as “conicity”) must not exceed 0.05mm /m based on the raceway diameter.

If the above tolerances cannot be met, epoxy resins such as ***CHOCKFAST ORANGE*** may be used. Ask for details.

SLEW RING ORIENTATION

The filling plugs are positioned at the raceway hardening junctions. When fitting, the filling plugs must be positioned at the point of minimum strain (usually at right angles to the main load axis).

In some cases the bolt pattern will by asymmetric to force this orientation.

DOWEL PINS OR SPIGOTS

In the event of high radial loads, or if a slew ring is used with a horizontal axis of rotation the circularity of the slewing ring may be affected. If circularity cannot be maintained by use of a structural adhesive (e.g. LOCTITE 586 or similar), the machined diameters on the bearing rings must be used. If this is impossible then a system of dowel pins should be considered.

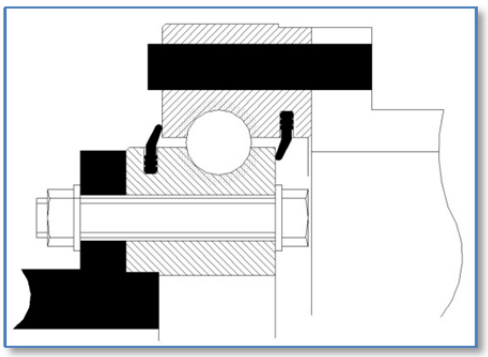

Using dowels or location diameters

FASTENING BOLTS

Although some manufacturers specify Grade 8.8 bolts, QCB® slewing rings are usually designed to be used with Grade 10.9 hexagon head or cap screw bolts. Check you have the correct grade of bolt available.

For bearings in “CC” steel (50Mn) the use of flat hardened washers is recommended to reduce surface pressures under the bolt head and nut. If cap screws are used the specific pressure under the bolt head should not exceed the limits of the material.

The use of any elastic (spring washers or Bellville washers) or serrated washers is prohibited and will negate the warranty.

Untreated bolts should be lightly oiled and tightened progressively using either a calibrated torque wrench or a hydraulic system, moving around the periphery of the slewing ring in 120 degree steps. The recommended bolt torque figures are tabulated overleaf.

Large diameter bolts should be tightened hydraulically.

Ensure that the slew ring rotation is tested during the tightening process (if possible) as any “tight points” will become evident and prompt immediate investigation. The bolt torque figures should be checked again before the machine enters service as a degree of “settling” may occur, then after 100 hours of operation, and thereafter at least on an annual basis.

Strength class to DIN/ISO 898			Grade 8.8		Grade 10.9		Grade 12.9	
Yield point Rp 0.2 (N/mm2)			640 for <= M16 660 for > M16		940 MPa		1100 MPa	
ISO thread DIN 13	Stress x-section area mm2	Core x-section area mm2	Tension force (KN)	Tightening torque (Nm)	Tension force (KN)	Tightening torque (Nm)	Tension force (KN)	Tightening torque (Nm)
M12	84.3	76.2	38.5	78	56	117	66	135
M14	115	105	53	126	77	184	90	216
M16	157	144	72	193	106	279	124	333
M18	193	175	92	270	129	387	151	459
M20	245	225	117	387	166	558	194	648
M22	303	282	146	522	208	747	243	873
M24	353	324	168	666	239	954	280	1116
M27	459	427	221	990	315	1395	370	1665
M30	561	519	270	1350	385	1890	450	2250
M33	694	547	335	To be determined by bolt elongation measurement	450	To be determined by bolt elongation measurement	560	To be determined by bolt elongation measurement
M36	817	759	395		560		660	
M39	976	913	475		670		790	
M42	1120	1045	542		772		904	
M45	1300	1224	632		905		1059	
M48	1470	1377	714		1018		1191	
M52	1760	1652	857		1221		1429	
M56	2030	1905	989		1408		1648	
M60	2360	2227	1156		1647		1927	

SEALS

QCB® slew rings are fitted with a nitrile or NBR rubber lip seal which rides on the surface of the adjacent ring. In some high temperature units this is replaced with a VITON lip seal.

Special seal arrangements will be proposed if required. These include:

- Double seals
- V-ring seals
- Quad section seals
- Metal shields
- Offshore seals

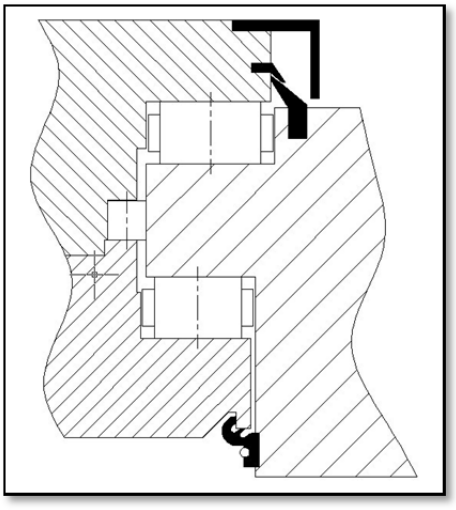

Special seals

Seals require annual inspection and possibly replacement if they are exposed.

GEARING

Metric slew rings generally have a 20^0 involute spur gear, although helical gears exist.

Imperial bearings can use either a Fellowes Stub gear or an American stub or full depth gear.

As many slewing rings exhibit an addendum correction it is imperative to get a suitably corrected pinion to ensure efficient meshing.

Our technical staff utilise the most up to date calculation software available in the design process.

Expert gear analysis

Material specific gear strength figures ($\mathbf{F_{normal}}$ and $\mathbf{F_{max}}$) for all bearings are listed on the drawings.

Detailed gear analyses are offered for high torque or multi-drive applications.

BACKLASH

Pinion backlash must be set at the point of maximum eccentricity on the slew ring. This will be marked, usually by 3 painted teeth.

Ensure each pinion is properly aligned to the gear with good contact maintained over the full face width.

A minimum clearance of between 0.3 – 0.5 x module is recommended under normal circumstances.

MOD	Backlash (mm)	MOD	Backlash (mm)	MOD	Backlash (mm)
4	**0.12 – 0.16**	**10**	**0.30 – 0.40**	18	**0.54 – 0.72**
5	**0.15 – 0.20**	**12**	**0.36 – 0.48**	**20**	**0.60 – 0.80**
6	**0.18 – 0.24**	**14**	**0.42 – 0.56**	**22**	**0.66 – 0.88**
8	**0.24 – 0.32**	**16**	**0.48 – 0.64**	**24**	**0.72 – 0.96**

During installation the slewing rings should be rotated a few times to check the gear mesh.

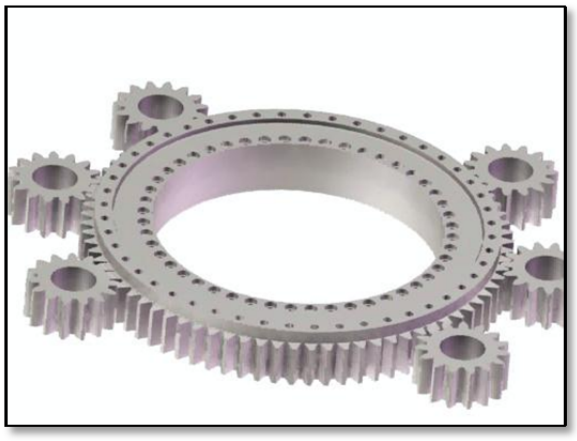

Slew ring with multiple drive pinions

OPERATIONAL CLEARANCE AND WEAR

After assembly the clearance or total deflection of the slewing ring under known test conditions should be determined to serve as reference data for future clearance checks to determine the amount of wear in the bearing.

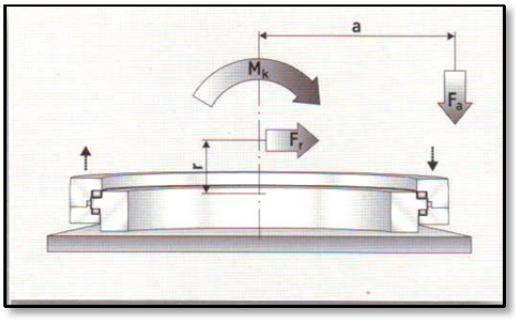

Simple wear check

The degree of "tilt" in the bearing can be measured, or the relative axial and radial movement of the rings using dial gauges. An average of at least 4 measurements around the circumference should be recorded.

Measurements should be taken as close to the raceways as possible to minimise the effects of elastic deflections in the structure. The measurement points should be marked so that the test can be recreated.

In general, slewing rings will wear at a linear rate in service. Once this rate of wear accelerates it is nearing the end of its service life.

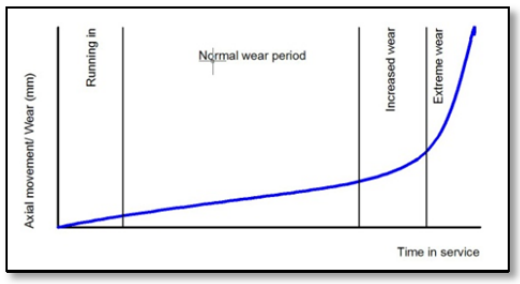

Normal wear rates

Typical allowable wear figures for normal applications are tabulated below:-

For single and double row ball bearings

Track dia up to	Ball dia				
	20	25	30	35	40
(mm)	*(mm)*	*(mm)*	*(mm)*	*(mm)*	*(mm)*
1000	1.4	1.4	1.5	1.7	1.9
1250		1.5	1.6	1.7	2.0
1500		1.6	1.7	1.7	2.0
1750			1.7	1.8	2.1
2000			1.8	1.9	2.2
2250				2.0	2.3
2500				2.0	2.3

For single row x-roller bearings

Track dia up to	Roller dia				
	16	20	25	32	40
(mm)	*(mm)*	*(mm)*	*(mm)*	*(mm)*	*(mm)*
400	0.22	0.22	0.24		
800	0.25	0.27	0.29	0.33	0.38
1000	0.30	0.32	0.34	0.38	0.43
1500	0.50	0.52	0.54	0.58	0.63
2000		0.62	0.64	0.68	0.73
2500			0.74	0.78	0.83

These figures do not apply to safety critical applications (e.g. amusement rides).

As a "rule of thumb", once the measured deflection exceeds 1.5x the initial figure, plans for the replacement of the slew ring should be made – considering that they are sometimes long lead items. If the measured deflection exceeds 2x the initial clearance then the ring should be replaced immediately for safety reasons.

RACEWAY LUBRICATION

QCB® slewing rings are factory filled with standard NLGI class 2 mineral oil based EP grease.

The raceways can be adequately lubricated by any good quality standard lithium based EP2 bearing grease. Typical raceway lubricants include:-

Brand	Bearing/ raceway grease	Operating temps
ARAL	**Aralub HLP2**	-30C to +120C
BECHEM	**Rhus L474/2 or High Lub L2EP**	-20C to +120C
BP	**Energrease LS-EP-2**	-20C to +120C
ESSO	**Beacon EP2**	-20C to +120C
TOTAL FINA ELF	**Multis EP2 or Lical EP2**	-30C to +120C
EXXONMOBIL	**Mobilith SHC460**	-30C to +120C
KLUBER	**Centoplex 2 EP**	-20C to +120C
RHENUS	**Norlith MZP 2**	-30C to +130C
SHELL	**Retina EP2 or Alvania EP (LF) 2**	-25C to +130C
FUCHS	**Stabyl LT50**	-50C to +130C

Slewing rings can be delivered with varying amounts of grease, or may have been subject to long term storage. *The onus is on the customer to check that the slewing ring is adequately lubricated when entered into service*.

The regreasing interval is best determined by the environment, and is mandatory after a long period of storage. In aggressive environments it must be recognised that the grease acts as a barrier to contamination.

Environmental conditions	Recommended relube interval
Dry & clean workshop	~300 hours operation or 6 months
Outside and exposed	~100-200 hours operation or 4 months
Aggressive environment	~50 hours operation or 2 months
Extreme conditions	~continuous lube preferred

Grease nipples are provided on one ring or the other, sometimes both. Use whichever is convenient.

During regreasing it is advisable to rotate the bearing to ensure distribution of the fresh grease as well as to avoid over pressurising the seals as this may force them out of their grooves.

As most slew rings rotate slowly, they can operate 100% full of grease. Ideally a thin smear of fresh grease should start to weep from under the lip seals.

A simple formula helps to determine the approximate amount of grease required in grams (all dimensions in mm)

- Single row ball brg
  Grease qty (gr) = 0.7 x Raceway ϕ x ball ϕ^2 / 1000
- Single row roller brg
  Grease qty (gr) = 0.5 x Raceway ϕ x roller ϕ^2 / 1000

GEAR LUBRICATION

The gear should be lubricated immediately after assembly and setting of the backlash. Suitable open gear grease should be brushed or sprayed on to cover the teeth completely.

Common gear lubricants include

Brand	Gear grease	Operating temps
ARAL	Aralub LFZ 1	-20C to +120C
BECHEM	Berulit GA 400	-20C to +180C
BP	Energol WRL/ GR 154 GS	-20C to +120C
TOTAL FINA ELF	Cardrexa DC1 / Ceran AD	-20C to +125C
EXXONMOBIL	Mobiltac 81/ Mobilgear OGL 007	-20C to +120C
KLUBER	Grafloson CA 901	-20C to +180C
RHENUS	Norplex AKG 0	-20C to +200C
SHELL	Aeroshell Grease 14 / Malleus GL 205	-54C to +93C

AN AUTOMATIC LUBRICATION SYSTEM IS PREFERRED AS IT WILL INJECT SMALL QUANTITIES OF GREASE, OFTEN.

QCB SLEW RING NUMBERING SYSTEM

The QCB® bearing numbering system includes number and letters in specific groups and with the following meanings

E.g. H SEG H 1166 2 20 01 6 CC LM

H	Helical gear (*omit if not required*)
SEG	Style or family type code
H	Hardened gear (*omit if not required*)
1166	Outer diameter (*mm*)
2	Number of raceways
20	Size of major rolling element ("*X20" if x-roller bearing*)
01	Design number
6	Precision grade (*omit if standard industrial clearances*)
CC	Material of inner & outer rings
LM	NBC designer

Family types

- FUN Flanged, ungeared
- FIG Flanged, internal gear
- FEG Flanged, external gear
- SUN Solid section, ungeared
- SIG Solid section, internal gear
- SEG Solid section, external gear

Design number

- 5- OEM designs – generally not for resale – can be a combination of features
- 6- Reserved for imperial dimension bearings
- Other combinations relate to seal or spacer changes away from standard

Precision grade

- - Standard industrial clearances as per drawing
- 6 P6 internal clearances
- 5 P5 internal clearances
- A Light preload

Most common materials
1st digit pertains to the inner ring, 2nd digit pertains to the outer ring

- CC 50Mn Broadly equivalent to C45 (common in Europe)
- AA 42CrMo4
- EE AISI 52100 Through hardened steel

Flanged Ring 20mm ball (Metric Series)

The **F20 Metric Series** comprises a set of slewing rings of constant height (56mm) with a flanged cross section on one or both rings, and with external diameters ranging from 486mm to 1166mm.

FUN 20 Series	**F**langed **UN**geared bearings
FIG 20 Series	**F**langed **I**nternal **G**ear bearings
FEG 20 Series	**F**langed **E**xternal **G**ear bearings

The standard internal construction consists of a series of balls with plastic spacers, but ball spacers, steel or even brass spacers can be supplied for specific applications.

Land riding Nitrile rubber seal strip is standard, but similar VITON seals can be supplied to order.

The gears are standard metric spur gears with 20 degree pressure angle and no addendum correction. Pinions can be supplied if required.

Bearings are usually lubricated with a Lithium EP2 grease, but a variety of special greases can be supplied to special order.

Custom designs include
double or other drilling patterns
higher precision location diameters
zinc plating for corrosion protection
reduced internal clearance

While a flange reduces the weight of the bearing, it also reduces it's torsional stiffness and these bearings are thus best suited to light or medium loaded applications where the load has no great eccentricity.

Industrial positioners (e.g. welding and assembly jigs)
Ship or truck loading chute swivels
Stretch wrapping machines
Conveyors and associated materials handling equipment
Simple amusement rides

Flanged Ring 20mm ball Ungeared (Metric)

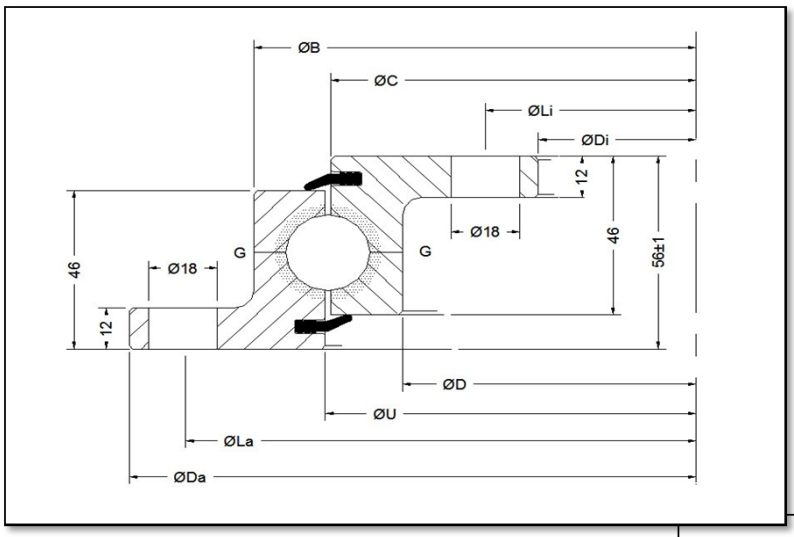

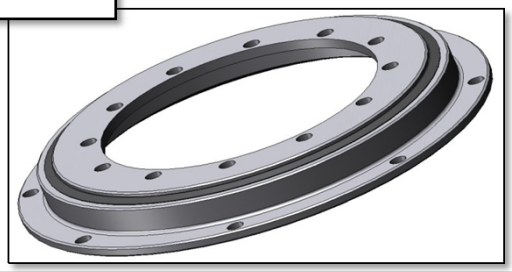

NBC Part	Outline dimensions & weight							
	D_a	B	U	C	D	D_i	Load curve	Weight
	mm	*mm*	*mm*	*mm*	*mm*	*mm*		*kg*
FUN 505 20 01 CC LM	518	453	415.5	412.5	375	304	1	23.5
FUN 650 20 01 CC LM	648	583	545.5	542.5	505	434	2	31
FUN 750 20 01 CC LM	748	683	645.5	642.5	605	534	3	36.5
FUN 850 20 01 CC LM	848	783	745.5	742.5	705	634	4	43
FUN 950 20 01 CC LM	948	883	845.5	842.5	805	734	5	48
FUN 1050 20 01 CC LM	1048	983	945.5	942.5	905	834	6	53
FUN 1200 20 01 CC LM	1198	1133	1095.5	1092.5	1055	984	7	62

NBC Part	Outer holes		Inner holes					
	L_a	n_a	L_i	n_i				
	mm		*mm*					
FUN 505 20 01 CC LM	490	8	332	12				
FUN 650 20 01 CC LM	620	10	462	14				
FUN 750 20 01 CC LM	720	12	562	16				
FUN 850 20 01 CC LM	820	12	662	16				
FUN 950 20 01 CC LM	920	14	762	18				
FUN 1050 20 01 CC LM	1020	16	862	20				
FUN 1200 20 01 CC LM	1170	16	1012	20				

Standard grease fitting # at least 2 x M8 on inner and outer rings

Flanged Ring 20mm ball Internal Gear (Metric)

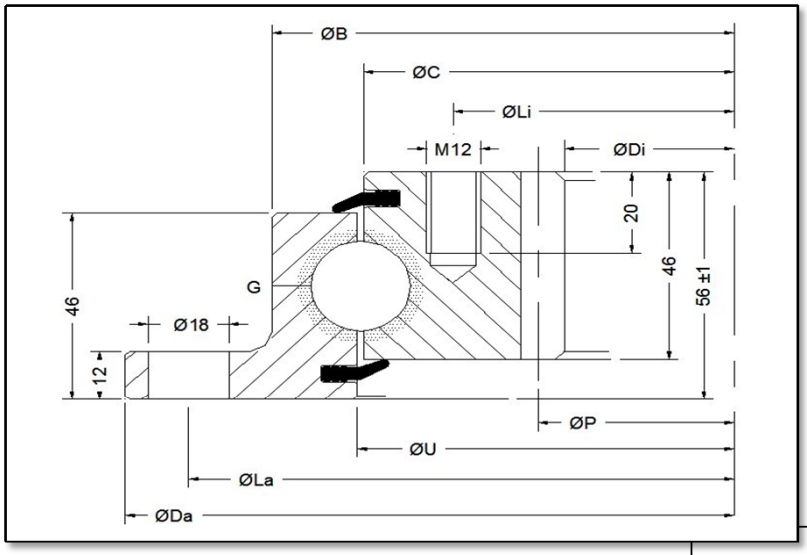

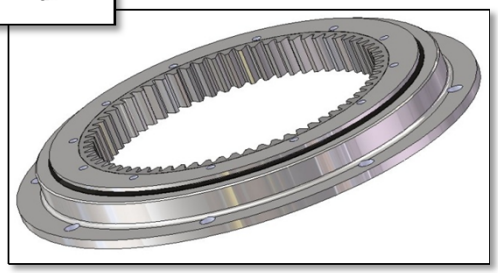

NBC Part	Outline dimensions & weight							
	D_a	B	U	C	D_i		Load curve	Weight
	mm	*mm*	*mm*	*mm*	*mm*			*kg*
FIG 505 20 01 CC LM	518	453	415.5	412.5	326.5		1	27
FIG 650 20 01 CC LM	648	583	545.5	542.5	445.2		2	37.5
FIG 750 20 01 CC LM	748	683	645.5	642.5	547.2		3	44.5
FIG 850 20 01 CC LM	848	783	745.5	742.5	649.2		4	51
FIG 950 20 01 CC LM	948	883	845.5	842.5	737.6		5	61
FIG 1050 20 01 CC LM	1048	983	945.5	942.5	841.6		6	65
FIG 1200 20 01 CC LM	1198	1133	1095.5	1092.5	985.6		7	80

NBC Part	Outer holes		Inner holes		20° spur gear			
	L_a	n_a	L_i	n_i	P	m	z	$F_{z\,MAX}$
	mm		*mm*		*mm*			*KN*
FIG 505 20 01 CC LM	490	8	375	12	335	5	67	22.8
FIG 650 20 01 CC LM	620	10	505	16	456	6	76	27.4
FIG 750 20 01 CC LM	720	12	605	18	558	6	93	27.4
FIG 850 20 01 CC LM	820	12	705	20	660	6	110	27.4
FIG 950 20 01 CC LM	920	14	805	20	752	8	94	36.6
FIG 1050 20 01 CC LM	1020	16	905	22	856	8	107	36.6
FIG 1200 20 01 CC LM	1170	16	1055	24	1000	8	125	36.6

Standard grease fitting # at least 2 x M8 on outer ring

Flanged ring 20mm ball External Gear (Metric)

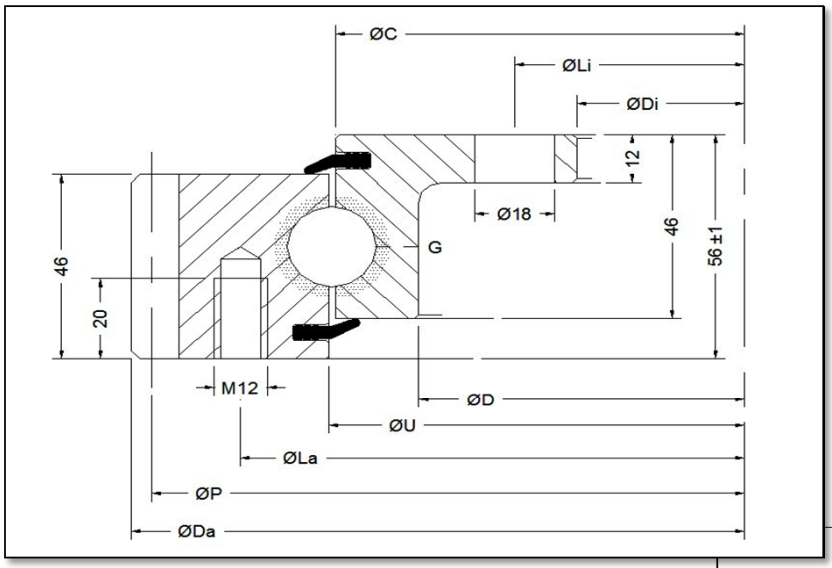

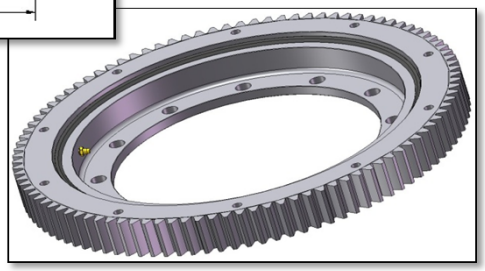

NBC Part	Outline dimensions & weight							
	D_a	B	U	C	D	D_i	Load curve	Weight
	mm	*mm*	*mm*	*mm*	*mm*	*mm*		*kg*
FEG 505 20 01 CC LM	504.0		415.5	412.5	375	304	1	29
FEG 650 20 01 CC LM	640.8		545.5	542.5	505	434	2	40
FEG 750 20 01 CC LM	742.8		645.5	642.5	605	534	3	47
FEG 850 20 01 CC LM	838.8		745.5	742.5	705	634	4	53
FEG 950 20 01 CC LM	950.0		845.5	842.5	805	734	5	64
FEG 1050 20 01 CC LM	1046.4		945.5	942.5	905	834	6	69
FEG 1200 20 01 CC LM	1198.4		1095.5	1092.5	1055	984	7	82

NBC Part	Outer holes		Inner holes		20° spur gear			
	L_a	n_a	L_i	n_i	P	m	z	$F_{z\,MAX}$
	mm		*mm*		*mm*			*KN*
FEG 505 20 01 CC LM	455	10	332	12	495	5	99	21.6
FEG 650 20 01 CC LM	585	14	462	14	630	6	105	26.2
FEG 750 20 01 CC LM	685	16	562	16	732	6	122	26.2
FEG 850 20 01 CC LM	785	18	662	16	828	6	138	26.2
FEG 950 20 01 CC LM	885	18	762	18	936	8	117	35.2
FEG 1050 20 01 CC LM	985	20	862	20	1032	8	129	35.2
FEG 1200 20 01 CC LM	1135	22	1012	20	1184	8	148	35.2

Standard grease fitting # at least 2 x M8 on inner ring

Flanged ring 20mm ball Static Load Curves

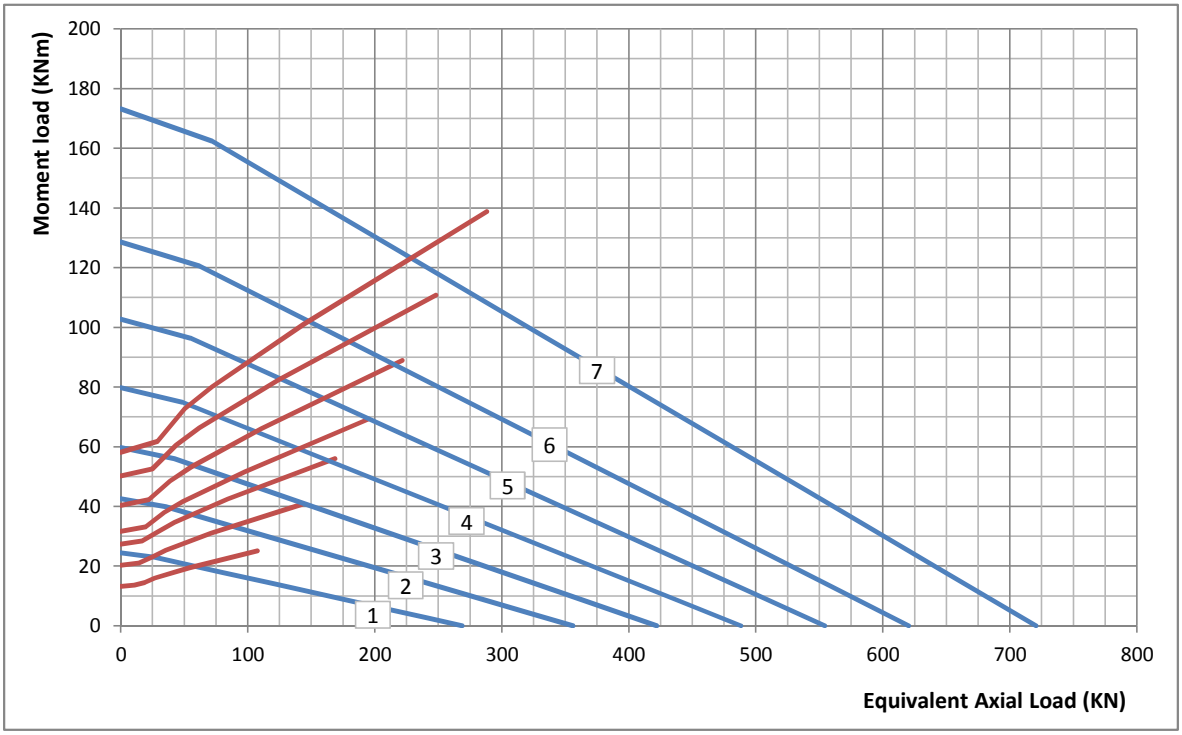

Raceway load limit

Bolt limit curve (Grade 8.8 bolt)

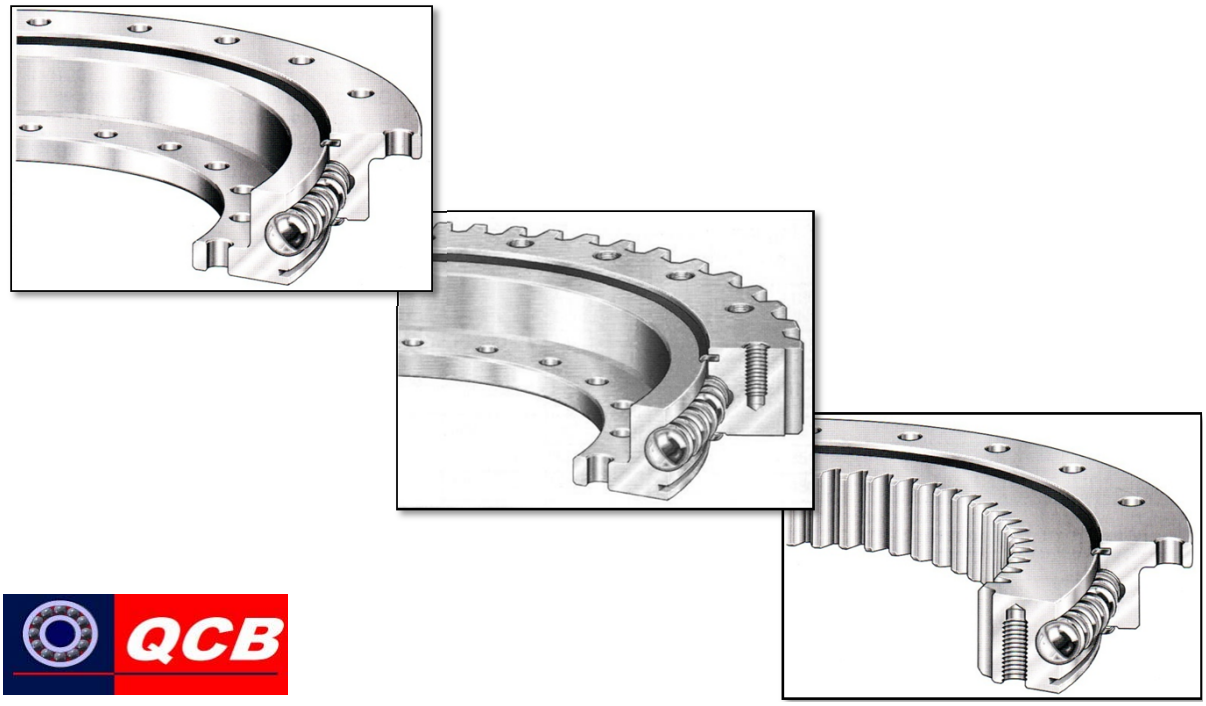

Flanged Ring 32mm ball (Metric Series)

Slewing rings for medium to heavy duty applications in a wide range of industries

The **F32 Metric Series** comprises a set of slewing rings of constant height (90mm) with a flanged cross section on one or both rings, and with external diameters ranging from 1098mm to 1600mm.

FUN 32 Series	**F**langed **UN**geared bearings
FIG 32 Series	**F**langed **I**nternal **G**ear bearings
FEG 32 Series	**F**langed **E**xternal **G**ear bearings

The standard internal construction consists of a series of balls with plastic spacers, but ball spacers, steel or even brass spacers can be supplied for specific applications.

The gears are standard metric spur gears with 20 degree pressure angle. Pinions can be supplied if required.

Land riding Nitrile rubber seal strip is standard, but similar VITON seals can be supplied to order.

Bearings are usually lubricated with a Lithium EP2 grease, but a variety of special greases can be supplied to special order.

Custom designs include
double or other drilling patterns
higher precision location diameters
zinc plating for corrosion protection
reduced internal clearance

While a flange reduces the weight of the bearing, it also reduces it's torsional stiffness unit and these bearings are thus best suited to light or medium loaded applications where the load has no great eccentricity such as

Industrial positioners (e.g. welding and assembly jigs)
Ship or truck loading chute swivels
Stretch wrapping machines
Conveyors and associated materials handling equipment
Simple amusement rides

Flanged Ring 32mm ball Ungeared (Metric)

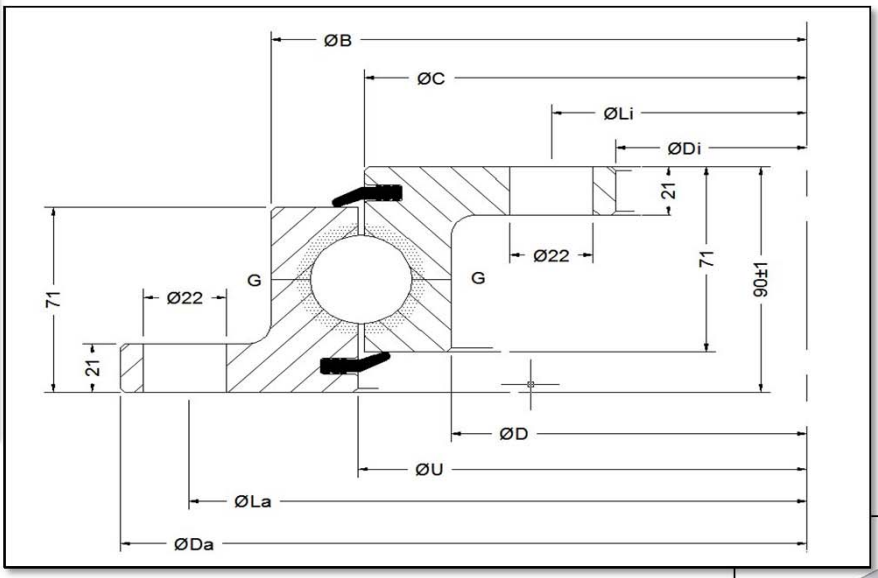

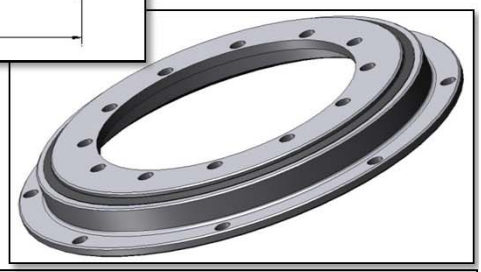

NBC Part	Outline dimensions & weight							
	D_a	B	U	C	D	D_i	Load curve	Weight
	mm	*mm*	*mm*	*mm*	*mm*	*mm*		*kg*
FUN 1100 32 00 CC LM	1100	1017	955	955	893	805	8	131
FUN 1200 32 00 CC LM	1200	1117	1055	1055	993	905	9	145
FUN 1300 32 00 CC LM	1300	1217	1155	1155	1093	1005	10	159
FUN 1400 32 00 CC LM	1400	1317	1255	1255	1193	1105	11	172
FUN 1500 32 00 CC LM	1500	1417	1355	1355	1293	1205	12	186
FUN 1600 32 00 CC LM	1600	1517	1455	1455	1393	1305	13	200

Larger sizes to 2000mm by special offer only

NBC Part	Outer holes		Inner holes					
	L_a	n_a	L_i	n_i				
	mm		*mm*					
FUN 1100 32 00 CC LM	1060	30	845	30				
FUN 1200 32 00 CC LM	1160	30	945	30				
FUN 1300 32 00 CC LM	1260	36	1045	36				
FUN 1400 32 00 CC LM	1360	42	1145	42				
FUN 1500 32 00 CC LM	1460	42	1245	42				
FUN 1600 32 00 CC LM	1560	48	1345	48				

Larger sizes to 2000mm by special offer only

Standard grease fitting # at least 4-6 x M8 on inner and outer rings

Flanged Ring 32mm ball Internal Gear (Metric)

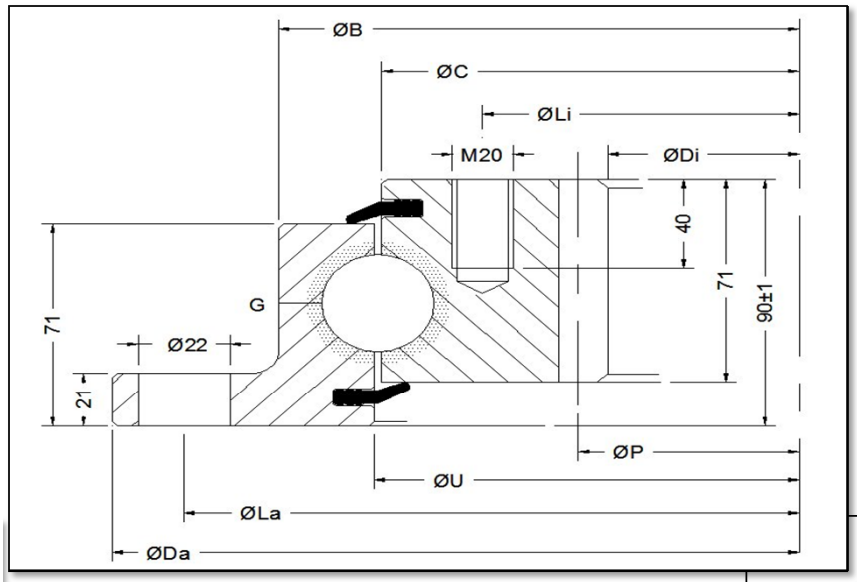

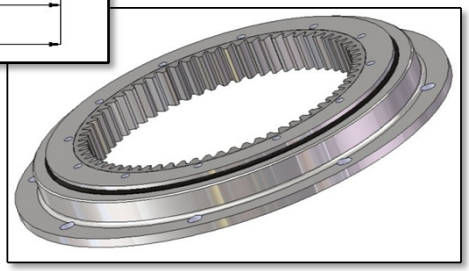

NBC Part	Outline dimensions & weight							
	D_a	B	U	C	D	D_i	Load curve	Weight
	mm	*mm*	*mm*	*mm*	*mm*	*mm*		*kg*
FIG 1100 32 00 CC LM	1100	1017	955	955		912	8	159
FIG 1200 32 00 CC LM	1200	1117	1055	1055		912	9	176
FIG 1300 32 00 CC LM	1300	1217	1155	1155		1012	10	192
FIG 1400 32 00 CC LM	1400	1317	1255	1255		1112	11	208
FIG 1500 32 00 CC LM	1500	1417	1355	1355		1212	12	226
FIG 1600 32 00 CC LM	1600	1517	1455	1455		1310	13	243

Larger sizes to 2000mm by special offer only

NBC Part	Outer holes		Inner holes		20° spur gear			
	L_a	n_a	L_i	n_i	P	m	z	$F_{z\,MAX}$
	mm		*mm*		*mm*			*KN*
FIG 1100 32 00 CC LM	1060	30	894	30	830	10	83	84.2
FIG 1200 32 00 CC LM	1160	30	994	30	930	10	93	84.2
FIG 1300 32 00 CC LM	1260	36	1094	36	1030	10	103	84.2
FIG 1400 32 00 CC LM	1360	42	1194	42	1130	10	113	84.2
FIG 1500 32 00 CC LM	1460	42	1294	42	1230	10	123	84.2
FIG 1600 32 00 CC LM	1560	48	1394	48	1330	10	133	84.2

Larger sizes to 2000mm by special offer only

Standard grease fitting # at least 2-4 x M8 on outer ring

Flanged ring 32mm ball External Gear (Metric)

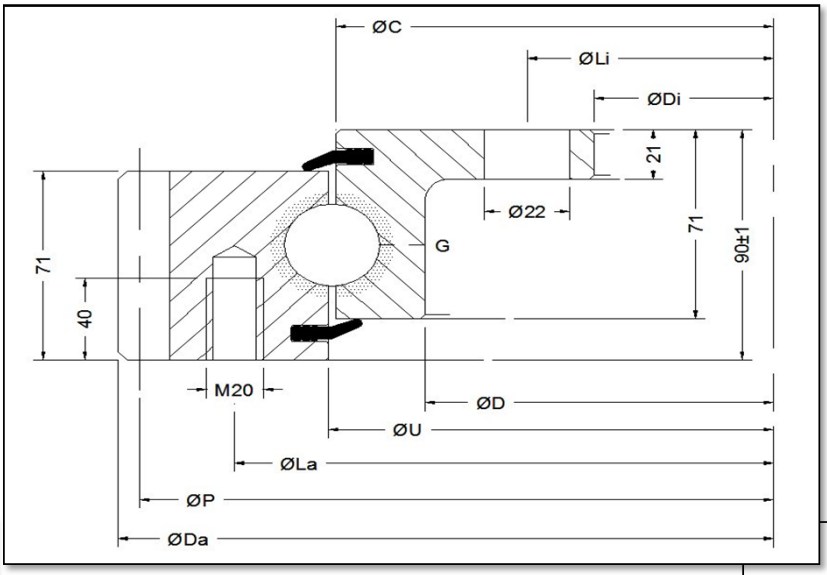

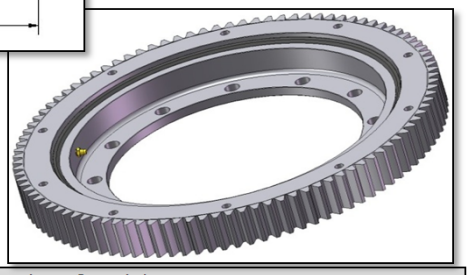

NBC Part	Outline dimensions & weight							
	D_a	B	U	C	D	D_i	Load curve	Weight
	mm	*mm*	*mm*	*mm*	*mm*	*mm*		*kg*
FEG 1100 32 00 CC LM	1098		955	955	893	805	8	165
FEG 1200 32 00 CC LM	1200		1055	1055	993	905	9	183
FEG 1300 32 00 CC LM	1300		1155	1155	1093	1005	10	200
FEG 1400 32 00 CC LM	1400		1255	1255	1193	1105	11	216
FEG 1500 32 00 CC LM	1500		1355	1355	1293	1205	12	234
FEG 1600 32 00 CC LM	1600		1455	1455	1393	1305	13	250

Larger sizes to 2000mm by special offer only

NBC Part	Outer holes		Inner holes		20° spur gear			
	L_a	n_a	L_i	n_i	P	m	z	$F_{z\,MAX}$
	mm		*mm*		*mm*			*KN*
FEG 1100 32 00 CC LM	1016	30	845	30	1080	9	120	68.2
FEG 1200 32 00 CC LM	1116	30	945	30	1180	10	118	75.7
FEG 1300 32 00 CC LM	1216	36	1045	36	1280	10	128	75.7
FEG 1400 32 00 CC LM	1316	42	1145	42	1380	10	138	75.7
FEG 1500 32 00 CC LM	1416	42	1245	42	1480	10	148	75.7
FEG 1600 32 00 CC LM	1516	48	1345	48	1580	10	158	75.7

Larger sizes to 2000mm by special offer only

Standard grease fitting # at least 2 x M8 on inner ring

Flanged ring 32mm ball Static Load Curves

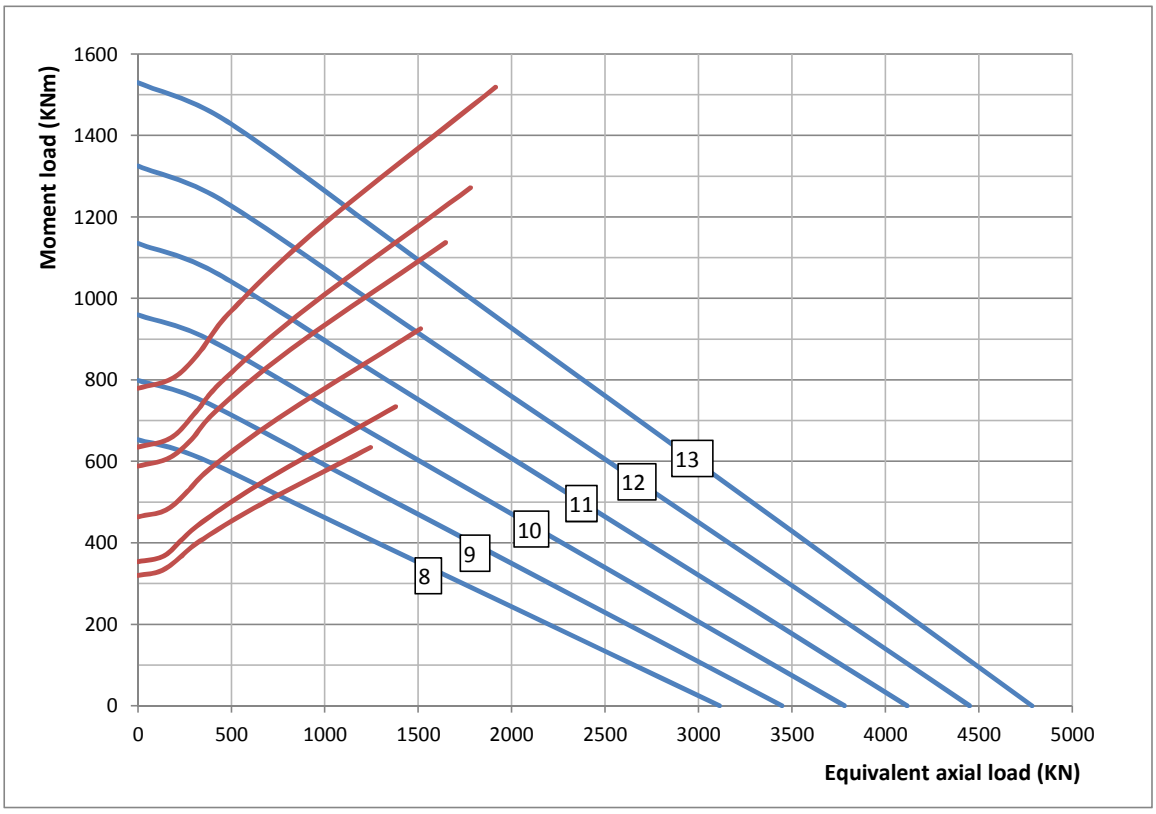

Raceway load limit

Bolt limit curve (Grade 8.8 bolts)

Solid Ring 20mm Metric Series

Slewing rings for medium to heavy duty applications in a wide range of industries

Similar to the FUN20 Metric Series, the **SUN20 Metric Series** comprises a set of slewing rings of constant height (56mm) but featuring solid section rings and with external diameters ranging from 486mm to 1166mm.

SUN 20 Series	**S**olid **UN**geared bearings
SIG 20 Series	**S**olid **I**nternal **G**ear bearings
SEG 20 Series	**S**olid **E**xternal **G**ear bearings

The SUN20 Metric series features location diameters as standard, and can have a wider range of hole patterns if required.

The normal internal construction consists of a series of balls with plastic spacers, but ball spacers, steel or brass spacers, or caged bearings can be supplied for specific applications.

The gears are standard metric spur gears with 20 degree pressure angle. Pinions can be supplied if required.

Land riding Nitrile rubber seal strip is standard, but similar VITON seals can be supplied to order.

Bearings are usually lubricated with a Lithium EP2 grease, but a variety of special greases can be supplied to special order.

Custom designs include

double or other drilling patterns
higher precision location diameters
zinc plating for corrosion protection
reduced internal clearance / preload
alternate materials including 42CrMo4 (AISI 4140) or stainless steel

Solid section rings offer higher torsional strength and rigidity to the raceways and thus higher load capacities compared to the flanged units and are best suited to medium or heavily loaded applications such as

Large industrial positioners (e.g. welding and assembly jigs)
Ship or truck loading chute swivels
Small cranes
Conveyors and associated materials handling equipment
Amusement rides

Solid Ring 20mm ball Ungeared

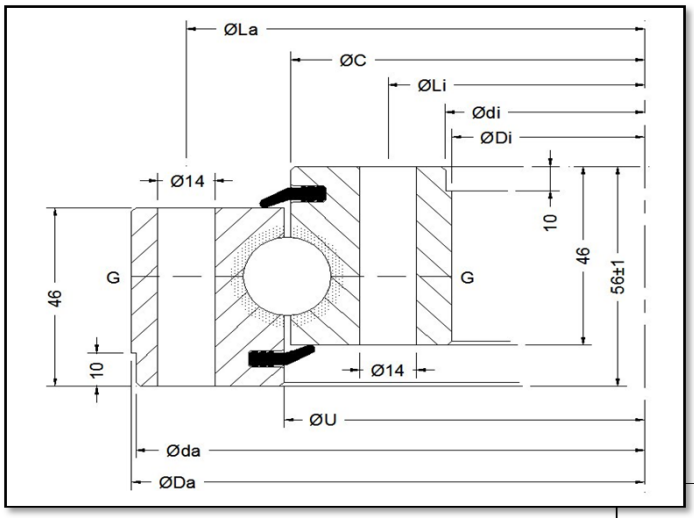

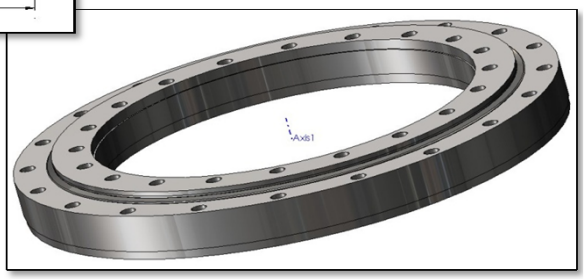

NBC Part	Outline dimensions & weight							
	D_a	D_i	U	C	d_a f9	d_i H9	Load curve	Weight
	mm	*mm*	*mm*	*mm*	*mm*	*mm*		*kg*
SUN 486 20 01 CC LM	486	342	415.5	412.5	484	344	14	29
SUN 616 20 01 CC LM	616	472	545.5	542.5	614	474	15	37
SUN 716 20 01 CC LM	716	572	645.5	642.5	714	574	16	44
SUN 816 20 01 CC LM	816	672	745.5	742.5	814	674	17	52
SUN 916 20 01 CC LM	916	772	845.5	842.5	914	774	18	60
SUN 1016 20 01 CC LM	1016	872	945.5	942.5	1014	874	19	67
SUN 1166 20 01 CC LM	1166	1022	1095.5	1092.5	1164	1024	20	77

NBC Part	Outer holes		Inner holes					
	L_a	n_a	L_i	n_i				
	mm		*mm*					
SUN 486 20 01 CC LM	460	24	368	24				
SUN 616 20 01 CC LM	590	32	498	32				
SUN 716 20 01 CC LM	690	36	598	36				
SUN 816 20 01 CC LM	790	40	698	40				
SUN 916 20 01 CC LM	890	40	798	40				
SUN 1016 20 01 CC LM	990	44	898	44				
SUN 1166 20 01 CC LM	1140	48	1048	48				

Standard grease fitting # at least 2 x M8 on inner and outer rings

Solid Ring 20mm ball Internal Gear

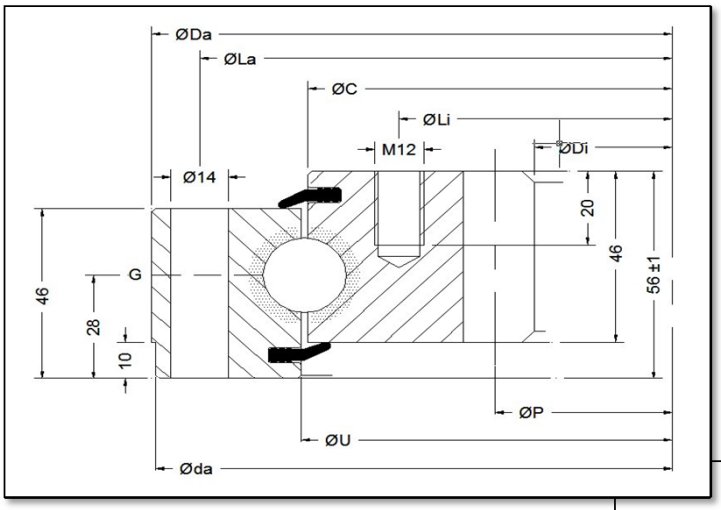

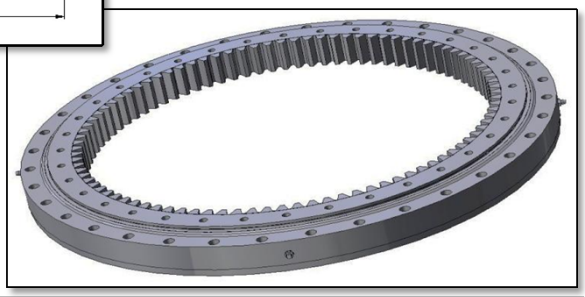

NBC Part	Outline dimensions & weight							
	D_a	D_i	U	C	d_a f9	d_i H9	Load curve	Weight
	mm	*mm*	*mm*	*mm*	*mm*	*mm*		*kg*
SIG 486 20 01 CC LM	486	324	415.5	412.5	484		14	31
SIG 616 20 01 CC LM	616	444	545.5	542.5	614		15	42
SIG 716 20 01 CC LM	716	546	645.5	642.5	714		16	50
SIG 816 20 01 CC LM	816	648	745.5	742.5	814		17	58
SIG 916 20 01 CC LM	916	736	845.5	842.5	914		18	69
SIG 1016 20 01 CC LM	1016	840	945.5	942.5	1014		19	76
SIG 1166 20 01 CC LM	1166	984	1095.5	1092.5	1164		20	91

NBC Part	Outer holes		Inner holes		20° spur gear			
	L_a	n_a	L_i	n_i	P	m	z	$F_{z\,MAX}$
	mm		*mm*		*mm*			*KN*
SIG 486 20 01 CC LM	460	24	375	24	335	5	67	22.8
SIG 616 20 01 CC LM	590	32	505	32	456	6	76	27.4
SIG 716 20 01 CC LM	690	36	605	36	558	6	93	27.4
SIG 816 20 01 CC LM	790	40	705	40	660	6	110	27.4
SIG 916 20 01 CC LM	890	40	805	40	752	8	94	36.6
SIG 1016 20 01 CC LM	990	44	905	44	856	8	107	36.6
SIG 1166 20 01 CC LM	1140	48	1055	48	1000	8	125	36.6

Standard grease fitting # at least 2 x M8 on outer ring

Solid ring 20mm ball External gear

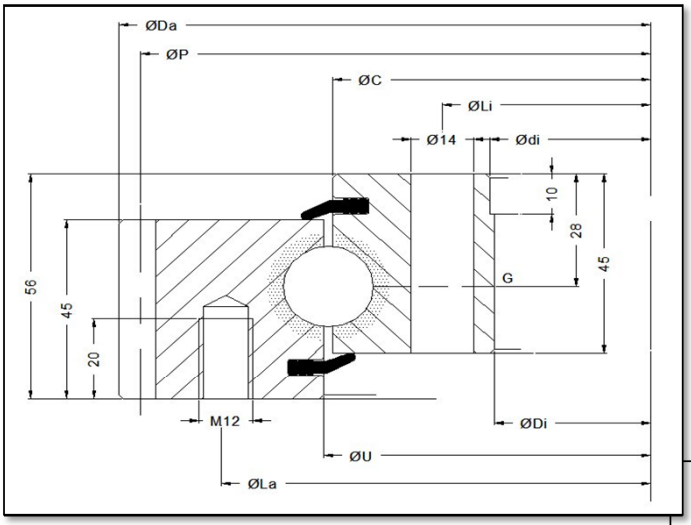

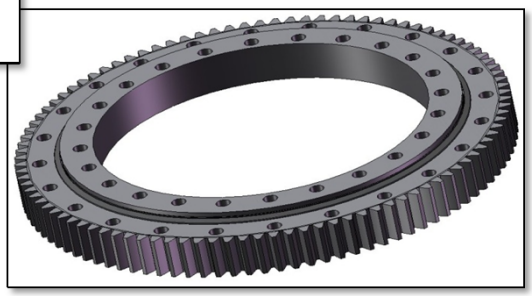

NBC Part	Outline dimensions & weight							
	D_a	D_i	U	C	d_a f9	d_i H9	Load curve	Weight
	mm	*mm*	*mm*	*mm*	*mm*	*mm*		*kg*
SEG 505 20 01 CC LM	503.3	342	415.5	412.5		344	14	31
SEG 650 20 01 CC LM	640.6	472	545.5	542.5		474	15	43
SEG 750 20 01 CC LM	742.3	572	645.5	6425.0		574	16	52
SEG 850 20 01 CC LM	838.1	672	745.5	742.5		674	17	59
SEG 950 20 01 CC LM	950.1	772	845.5	842.5		774	18	71
SEG 1050 20 01 CC LM	1046.1	872	945.5	942.5		874	19	77
SEG 1150 20 01 CC LM	1198.1	1022	1095.5	1092.5		1024	20	91

NBC Part	Outer holes		Inner holes		20° spur gear			
	L_a	n_a	L_i	n_i	P	m	z	$F_{z\,MAX}$
	mm		*mm*		*mm*			*KN*
SEG 505 20 01 CC LM	455	20	368	24	495	5	99	21.6
SEG 650 20 01 CC LM	585	28	498	32	630	6	105	26.2
SEG 750 20 01 CC LM	685	32	598	36	732	6	122	26.2
SEG 850 20 01 CC LM	785	36	698	40	828	6	138	26.2
SEG 950 20 01 CC LM	885	36	798	40	936	8	117	35.2
SEG 1050 20 01 CC LM	985	40	898	44	1032	8	129	35.2
SEG 1150 20 01 CC LM	1135	44	1048	48	1184	8	148	35.2

Standard grease fitting # at least 2 x M8 on inner ring

Solid ring 20mm ball Static Load Curves

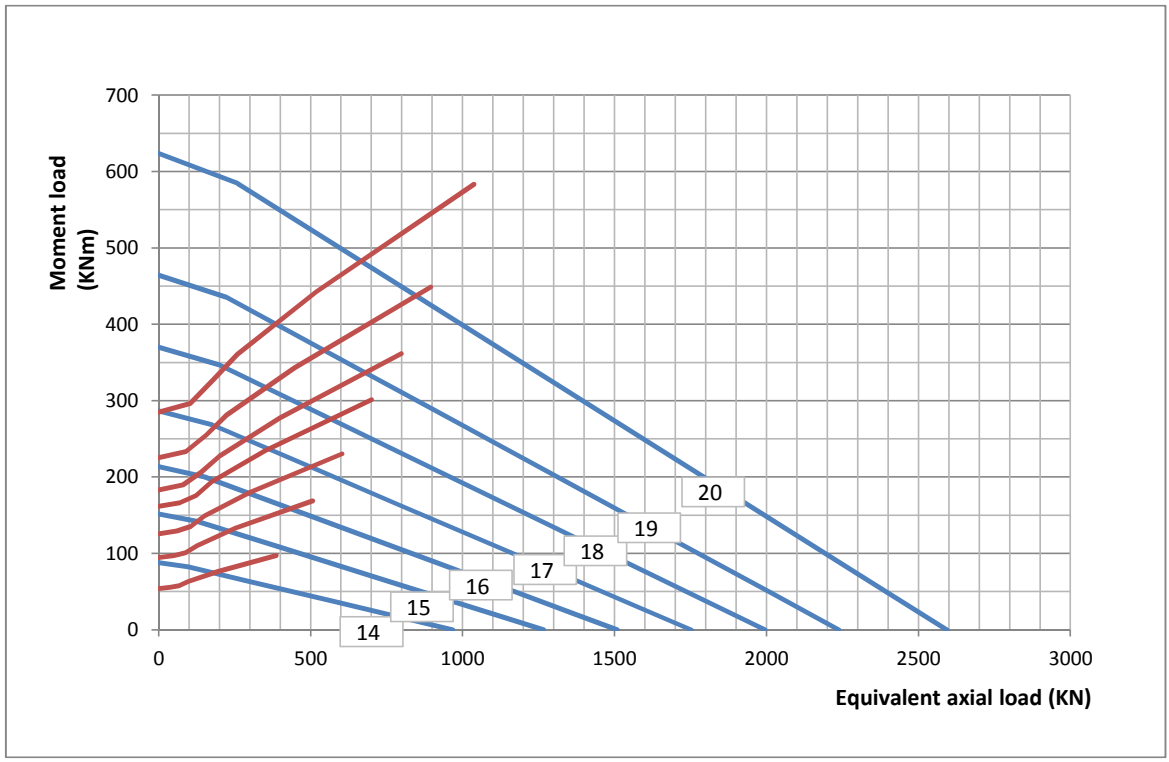

Raceway load limit

Bolt limit curve (Grade 10.9 bolt)

Solid Ring 14mm x-roller Metric Series

Slewing rings for medium to heavy duty applications in a wide range of industries

Dimensionally equal to the 20mm ball Metric Series, the **14mm x-roller Metric Series** comprises a set of slewing rings of constant height (56mm) but featuring solid section rings and with external diameters ranging from 486mm to 1166mm, but with a 14mm crossed roller raceway for added rigidity in the bearing race.

SUN X14 Series	**S**olid **UN**geared bearings
SIG X14 Series	**S**olid **I**nternal **G**ear bearings
SEG X14 Series	**S**olid **E**xternal **G**ear bearings

The 14mm x-roller series features location diameters as standard, and can have a wider range of hole patterns if required.

The normal internal construction consists of a series of 14mm rollers with plastic spacers.

The gears are standard metric spur gears with 20 degree pressure angle. Pinions can be supplied if required.

Land riding Nitrile rubber seal strip is standard, but similar VITON seals can be supplied to order.

Bearings are usually lubricated with a Lithium EP2 grease, but a variety of special greases can be supplied to special order.

Crossed roller bearings are generally used where a higher degree of accuracy in the bearing position is required compared to the ball bearing. They require a stiffer mating structure compared to a similar size ball bearing.

Solid Ring 14mm roller Ungeared

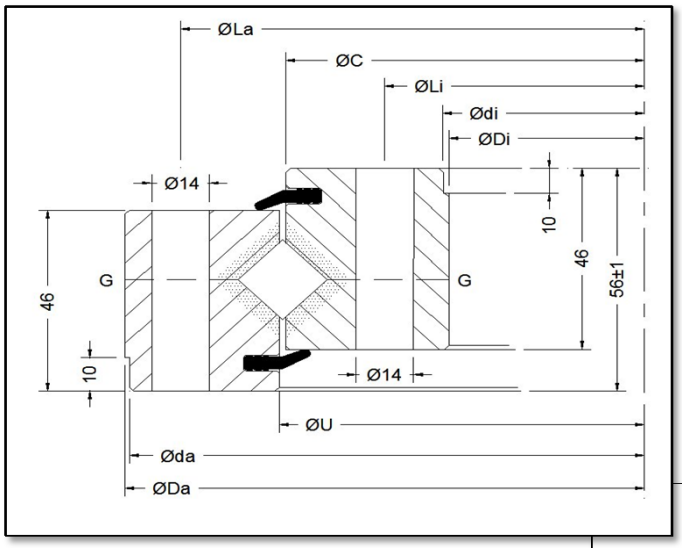

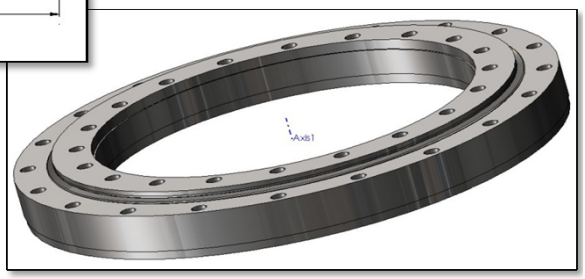

NBC Part	Outline dimensions & weight							
	D_a	D_i	U	C	d_a f9	d_i H9	Load curve	Weight
	mm	*mm*	*mm*	*mm*	*mm*	*mm*		*kg*
SUN 486 X14 01 CC LM	486	342	415.5	412.5	484	344	21	29
SUN 616 X14 01 CC LM	616	472	545.5	542.5	614	474	22	37
SUN 716 X14 01 CC LM	716	572	645.5	642.5	714	574	23	44
SUN 816 X14 01 CC LM	816	672	745.5	742.5	814	674	24	52
SUN 916 X14 01 CC LM	916	772	845.5	842.5	914	774	25	60
SUN 1016 X14 01 CC LM	1016	872	945.5	942.5	1014	874	26	67
SUN 1166 X14 01 CC LM	1166	1022	1095.5	1092.5	1164	1024	27	77

NBC Part	Outer holes		Inner holes					
	L_a	n_a	L_i	n_i				
	mm		*mm*					
SUN 486 X14 01 CC LM	460	24	368	24				
SUN 616 X14 01 CC LM	590	32	498	32				
SUN 716 X14 01 CC LM	690	36	598	36				
SUN 816 X14 01 CC LM	790	40	698	40				
SUN 916 X14 01 CC LM	890	40	798	40				
SUN 1016 X14 01 CC LM	990	44	898	44				
SUN 1166 X14 01 CC LM	1140	48	1048	48				

Standard grease fitting # at least 2 x M8 on inner and outer rings

Solid Ring 14mm roller Internal Gear

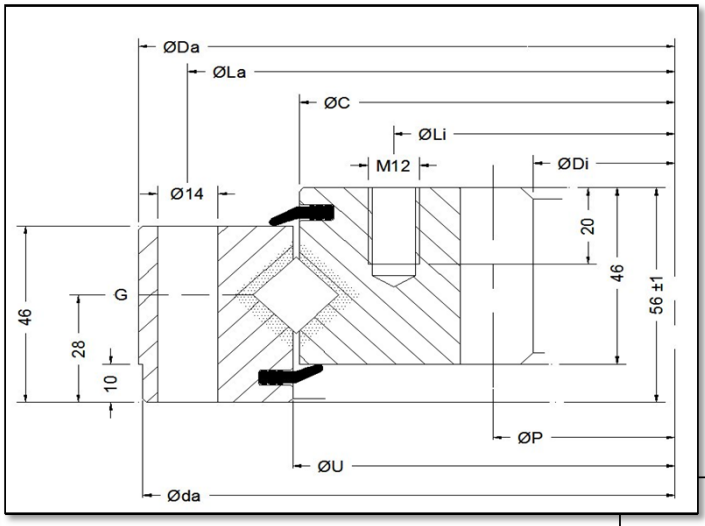

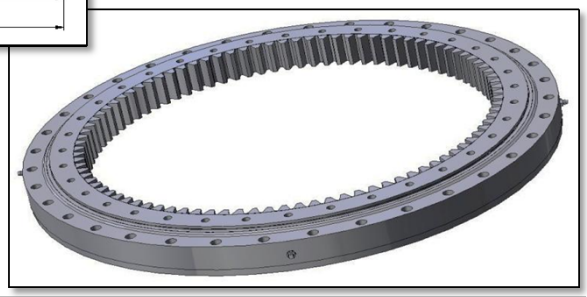

NBC Part	Outline dimensions & weight							
	D_a	D_i	U	C	d_a f9	d_i H9	Load curve	Weight
	mm	*mm*	*mm*	*mm*	*mm*	*mm*		*kg*
SIG 486 X14 01 CC LM	486	324	415.5	412.5	484		21	31
SIG 616 X14 01 CC LM	616	444	545.5	542.5	614		22	42
SIG 716 X14 01 CC LM	716	546	645.5	642.5	714		23	50
SIG 816 X14 01 CC LM	816	648	745.5	742.5	814		24	58
SIG 916 X14 01 CC LM	916	736	845.5	842.5	914		25	69
SIG 1016 X14 01 CC LM	1016	840	945.5	942.5	1014		26	76
SIG 1166 X14 01 CC LM	1166	984	1095.5	1092.5	1164		27	91

NBC Part	Outer holes		Inner holes		20° spur gear			
	L_a	n_a	L_i	n_i	P	m	z	$F_{z\,MAX}$
	mm		*mm*		*mm*			*KN*
SIG 486 X14 01 CC LM	460	24	375	24	335	5	67	22.8
SIG 616 X14 01 CC LM	590	32	505	32	456	6	76	27.4
SIG 716 X14 01 CC LM	690	36	605	36	558	6	93	27.4
SIG 816 X14 01 CC LM	790	40	705	40	660	6	110	27.4
SIG 916 X14 01 CC LM	890	40	805	40	752	8	94	36.6
SIG 1016 X14 01 CC LM	990	44	905	44	856	8	107	36.6
SIG 1166 X14 01 CC LM	1140	48	1055	48	1000	8	125	36.6

Standard grease fitting # at least 2 x M8 on outer ring

Solid ring 14mm roller External gear

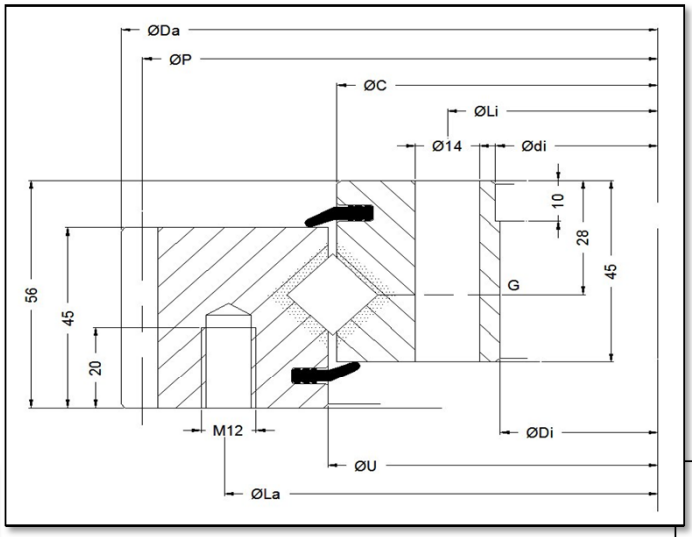

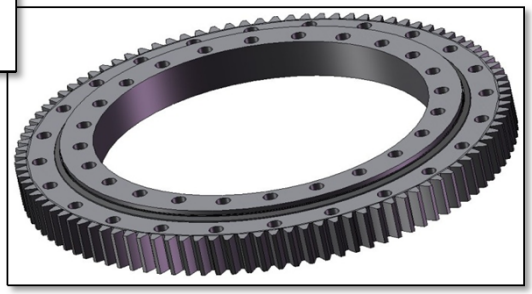

NBC Part	Outline dimensions & weight							
	D_a	D_i	U	C	d_a f9	d_i H9	Load curve	Weight
	mm	*mm*	*mm*	*mm*	*mm*	*mm*		*kg*
SEG 505 X14 01 CC LM	503.3	342	415.5	412.5		344	21	31
SEG 650 X14 01 CC LM	640.6	472	545.5	542.5		474	22	43
SEG 750 X14 01 CC LM	742.3	572	645.5	6425.0		574	23	52
SEG 850 X14 01 CC LM	838.1	672	745.5	742.5		674	24	59
SEG 950 X14 01 CC LM	950.1	772	845.5	842.5		774	25	71
SEG 1050 X14 01 CC LM	1046.1	872	945.5	942.5		874	26	77
SEG 1150 X14 01 CC LM	1198.1	1022	1095.5	1092.5		1024	27	91

NBC Part	Outer holes		Inner holes		20° spur gear			
	L_a	n_a	L_i	n_i	P	m	z	$F_{z\,MAX}$
	mm		*mm*		*mm*			*KN*
SEG 505 X14 01 CC LM	455	20	368	24	495	5	99	21.6
SEG 650 X14 01 CC LM	585	28	498	32	630	6	105	26.2
SEG 750 X14 01 CC LM	685	32	598	36	732	6	122	26.2
SEG 850 X14 01 CC LM	785	36	698	40	828	6	138	26.2
SEG 950 X14 01 CC LM	885	36	798	40	936	8	117	35.2
SEG 1050 X14 01 CC LM	985	40	898	44	1032	8	129	35.2
SEG 1150 X14 01 CC LM	1135	44	1048	48	1184	8	148	35.2

Standard grease fitting # at least 2 x M8 on inner ring

Solid ring 14mm roller Static Load Curves

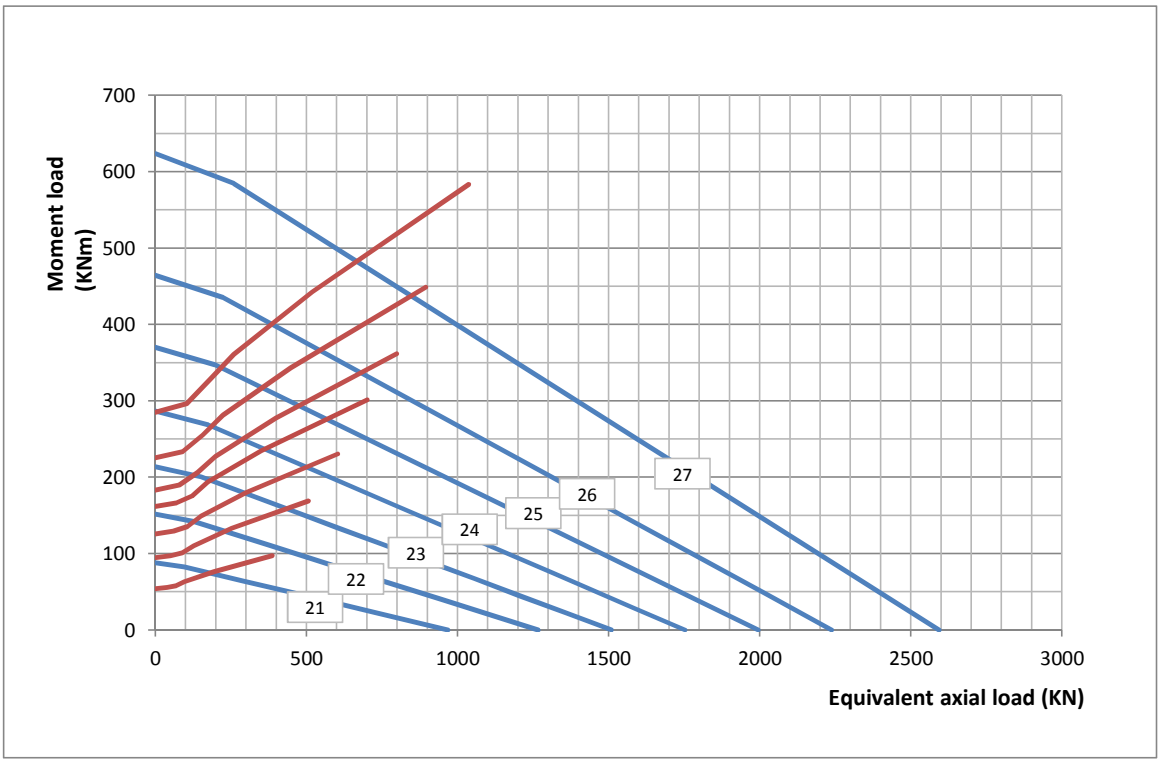

Raceway load limit

Bolt limit curve (Grade 10.9 bolt)

Solid Ring 25mm ball Metric Series

Slewing rings for medium to heavy duty and high torque applications in a wide range of industries

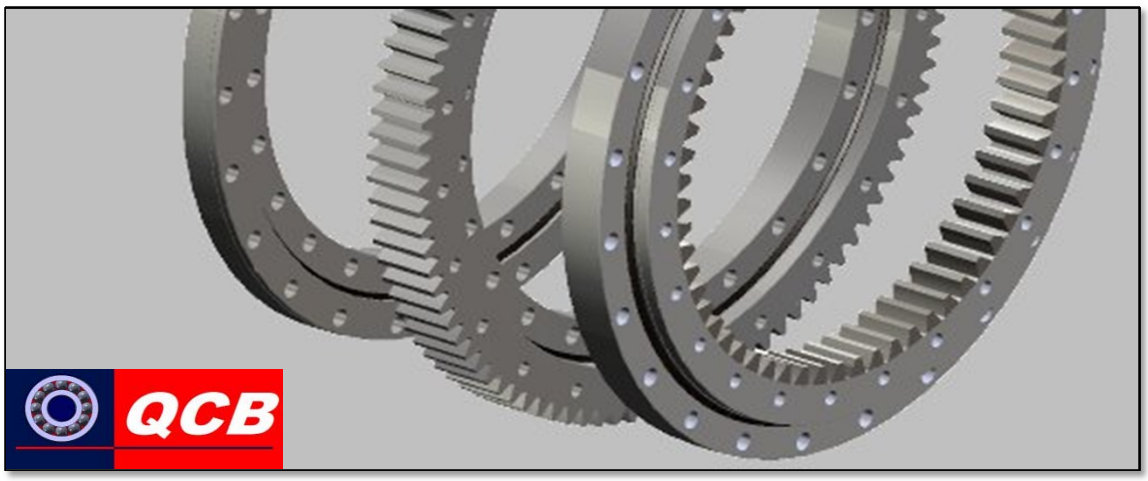

Similar to the SUN20 Metric Series, the **SUN25 Metric Series** comprises a set of slewing rings of constant height (80mm) but featuring solid section rings and with external diameters ranging from 855mm to 1598mm.

SUN 25 Series	**S**olid **UN**geared bearings
SIG 25 Series	**S**olid **I**nternal **G**ear bearings
SEG 25 Series	**S**olid **E**xternal **G**ear bearings

A feature of this series is the high module and wide gear face of the 20 degree metric spur gears, offering designers maximum gear capacity in a small diameter ring. Matching pinions can be specified if required.

The normal internal construction consists of a series of balls with plastic spacers, but ball spacers, steel or brass spacers, or caged bearings can be supplied for specific applications.

Land riding Nitrile rubber seal strip is standard, but similar VITON seals can be supplied to order.

Bearings are usually lubricated with a Lithium EP2 grease, but a variety of special greases can be supplied to special order.

Custom designs include

other drilling patterns
higher precision location diameters
zinc plating for corrosion protection
reduced internal clearance / preload
alternate materials including 42CrMo4 (AISI 4140) or stainless steel

Solid section rings offer higher torsional strength and rigidity to the raceways and thus higher load capacities compared to the flanged units and are best suited to medium or heavily loaded applications such as:-

Large industrial positioners (e.g. welding and assembly jigs)
Ship or truck loading chute swivels
Small cranes
Conveyors and associated materials handling equipment
Amusement rides
Winches
Umbilicals

Solid Ring 25mm ball Ungeared

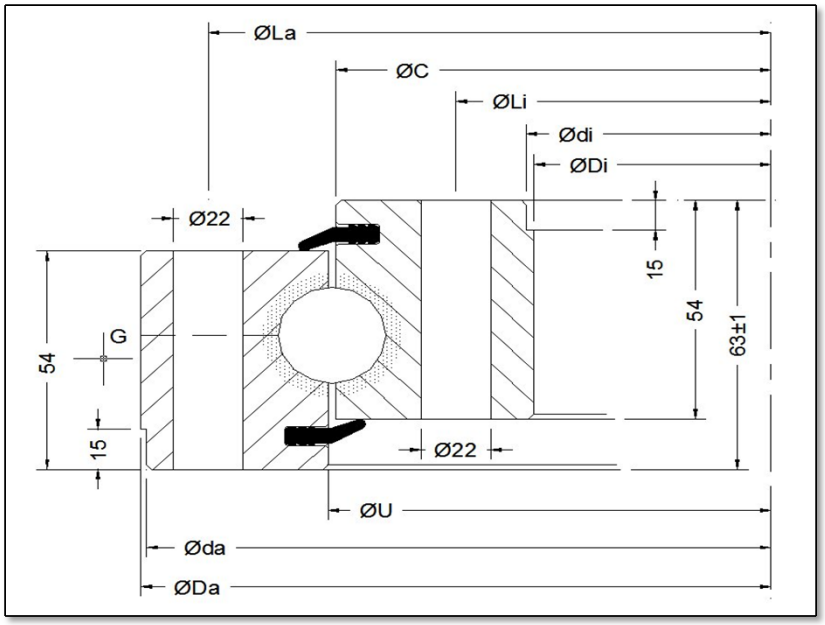

NBC Part	Outline dimensions & weight							
	D_a	D_i	U	C	d_a f9	d_i H9	Load curve	Weight
	mm	*mm*	*mm*	*mm*	*mm*	*mm*		*kg*
SUN 855 25 01 CC LM	855	655	757	753	853	657	38	90
SUN 955 25 01 CC LM	955	755	857	853	953	757	29	101
SUN 1055 25 01 CC LM	1055	855	957	953	1053	857	30	115
SUN 1155 25 01 CC LM	1155	955	1057	1053	1153	957	31	128
SUN 1255 25 01 CC LM	1255	1055	1157	1153	1253	1057	32	139
SUN 1355 25 01 CC LM	1355	1155	1257	1253	1353	1157	33	148
SUN 1455 25 01 CC LM	1455	1255	1357	1353	1453	1257	34	161
SUN 1555 25 01 CC LM	1555	1355	1457	1453	1553	1357	35	171

NBC Part	Outer holes		Inner holes					
	L_a	n_a	L_i	n_i				
	mm		*mm*					
SUN 855 25 01 CC LM	815	24	695	24				
SUN 955 25 01 CC LM	915	28	795	28				
SUN 1055 25 01 CC LM	1015	30	895	30				
SUN 1155 25 01 CC LM	1115	30	995	30				
SUN 1255 25 01 CC LM	1215	36	1095	36				
SUN 1355 25 01 CC LM	1315	42	1195	42				
SUN 1455 25 01 CC LM	1415	42	1295	42				
SUN 1555 25 01 CC LM	1555	48	1395	48				

Standard grease fitting # at least 2 x M8 on inner and outer rings

Solid Ring 25mm ball Internal Gear

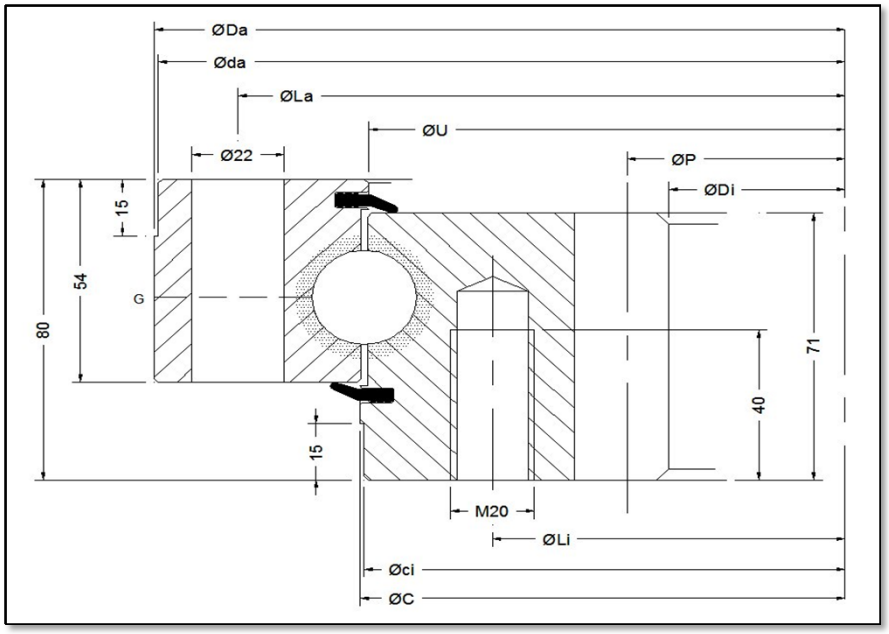

NBC Part	Outline dimensions & weight							
	D_a	D_i	U	C	d_a f9	c_i f9	Load curve	Weight
	mm	*mm*	*mm*	*mm*	*mm*	*mm*		*kg*
SIG 855 25 01 CC LM	855	610	753	757	853	755	38	119
SIG 955 25 01 CC LM	955	710	853	857	953	855	29	137
SIG 1055 25 01 CC LM	1055	810	953	957	1053	955	30	149
SIG 1155 25 00 CC LM	1155	910	1053	1057	1153	1055	31	165
SIG 1255 25 00 CC LM	1255	1010	1153	1157	1253	1155	32	180
SIG 1355 25 00 CC LM	1355	1110	1253	1257	1353	1255	33	198
SIG 1455 25 01 CC LM	1455	1210	1353	1357	1453	1355	34	215
SIG 1555 25 01 CC LM	1555	1310	1453	1457	1553	1455	35	229

NBC Part	Outer holes		Inner holes		20° stub gear			
	L_a	n_a	L_i	n_i	P	M	z	$F_{z\,MAX}$
	mm		*mm*		*mm*			*KN*
SIG 855 25 01 CC LM	815	24	694	24	630	10	63	98.9
SIG 955 25 01 CC LM	915	28	794	28	730	10	73	98.9
SIG 1055 25 01 CC LM	1015	30	894	30	830	10	83	98.9
SIG 1155 25 00 CC LM	1115	30	994	30	930	10	93	98.9
SIG 1255 25 00 CC LM	1215	36	1094	36	1030	10	103	98.9
SIG 1355 25 00 CC LM	1315	42	1194	42	1130	10	113	98.9
SIG 1455 25 01 CC LM	1415	42	1294	42	1230	10	123	98.9
SIG 1555 25 01 CC LM	1515	48	1394	48	1330	10	133	98.9

Standard grease fitting # at least 4 x M8 on outer ring

Solid ring 25mm ball External gear

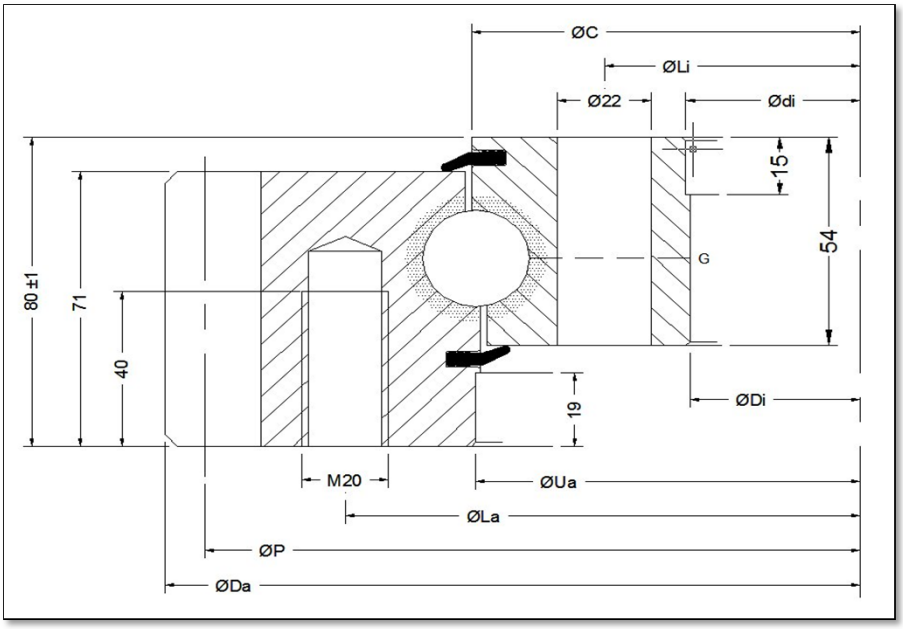

NBC Part	Outline dimensions & weight							
	D_a	D_i	U	C	U_a	d_i	Load curve	Weight
	mm	*mm*	*mm*	*mm*	*mm*	*mm*		*kg*
SEG 900 25 01 CC LM	898	655	753	757	755	657	38	128
SEG 1000 25 01 CC LM	997	755	853	857	855	757	29	145
SEG 1100 25 01 CC LM	1096	855	953	957	955	857	30	155
SEG 1200 25 01 CC LM	1198	955	1053	1057	1055	957	31	171
SEG 1300 25 01 CC LM	1298	1055	1153	1157	1155	1057	32	190
SEG 1400 25 01 CC LM	1398	1155	1253	1257	1255	1157	33	204
SEG 1500 25 01 CC LM	1498	1255	1353	1357	1355	1257	34	222
SEG 1600 25 01 CC LM	1598	1355	1453	1457	1455	1357	35	236

NBC Part	Outer holes		Inner holes		20° stub gear			
	L_a	n_a	L_i	n_i	P	M	z	$F_{z\,MAX}$
	mm		*mm*		*mm*			*KN*
SEG 900 25 01 CC LM	816	24	695	24	882	9	98	80.2
SEG 1000 25 01 CC LM	916	28	795	28	981	9	109	80.2
SEG 1100 25 01 CC LM	1016	30	895	30	1080	9	120	80.2
SEG 1200 25 01 CC LM	1116	30	995	30	1180	10	118	89
SEG 1300 25 01 CC LM	1216	36	1095	36	1280	10	128	89
SEG 1400 25 01 CC LM	1316	42	1195	42	1380	10	138	89
SEG 1500 25 01 CC LM	1416	42	1295	42	1480	10	148	89
SEG 1600 25 01 CC LM	1516	48	1395	48	1580	10	158	89

Standard grease fitting # at least 4 x M8 on inner ring

Solid ring 25mm ball Static Load Curves

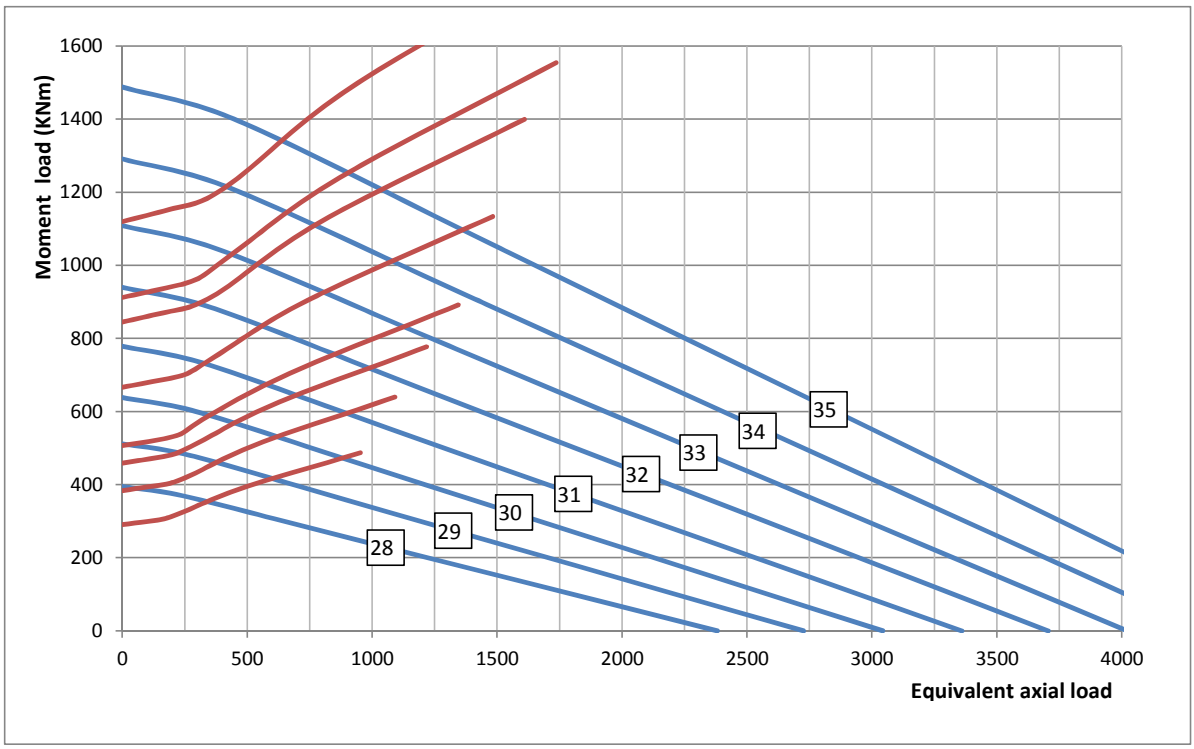

Double row ball slewing rings

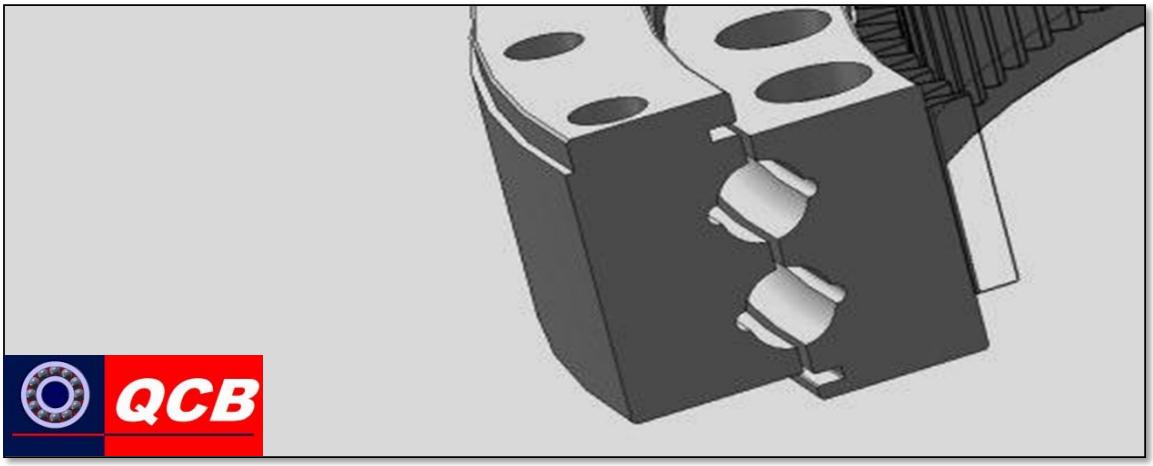

The normal internal construction consists of a series of balls with plastic spacers, but ball spacers, steel or brass spacers, or caged bearings can be supplied for specific applications.

Land riding Nitrile rubber seal strip is standard, but similar VITON seals can be supplied to order.

Bearings are usually lubricated with a Lithium EP2 grease, but a variety of special greases can be supplied to special order.

All QCB double row ball bearings are manufactured in 42CrMo4 steel.

Double row ball slew rings offer higher radial load capacity over the single row bearings and find application in:-

Large industrial positioners (e.g. welding and assembly jigs)
Ship or truck loading chute swivels
Jib cranes
Conveyors and associated materials handling equipment
Winches
Scrap handling grabs

Double row ball External Gear slew rings

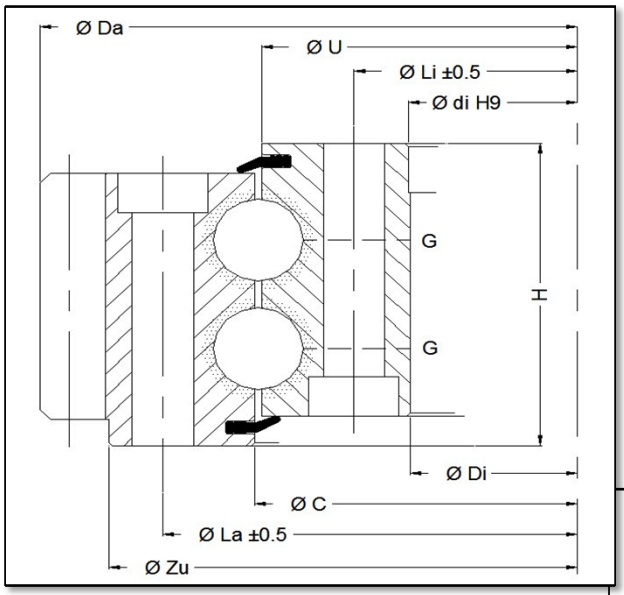

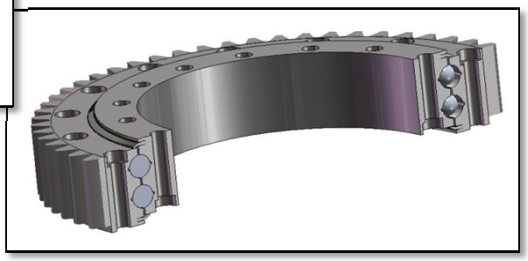

NBC Part	Outline dimensions & weight							
	D_a	D_i	U	C	H	d_i H9	Z_u	Weight
	mm	*mm*	*mm*	*mm*	*mm*	*mm*	*mm*	*kg*
SEG 504 2 25 01 AA LM	504	299	381	385	92	300	466	64
SEG 979 2 25 01 AA LM	979	716	819	823	102	718	935	208
SEG 1289 2 30 01 AA LM	1289.5	985	1114	1119	110	986	1240	340

NBC Part	Outer holes		Inner holes		20° spur gear			
	L_a	n_a	L_i	n_i	P	m	z	$F_{z\,MAX}$
	mm		*mm*		*mm*			*KN*
SEG 504 2 25 01 AA LM	436	16	330	16	488	8	61	91
SEG 979 2 25 01 AA LM	893	36	753	36	940	10	94	152
SEG 1289 2 30 01 AA LM	1198	40	1035	40	1250	10	125	340

Double row ball Internal Gear slew rings

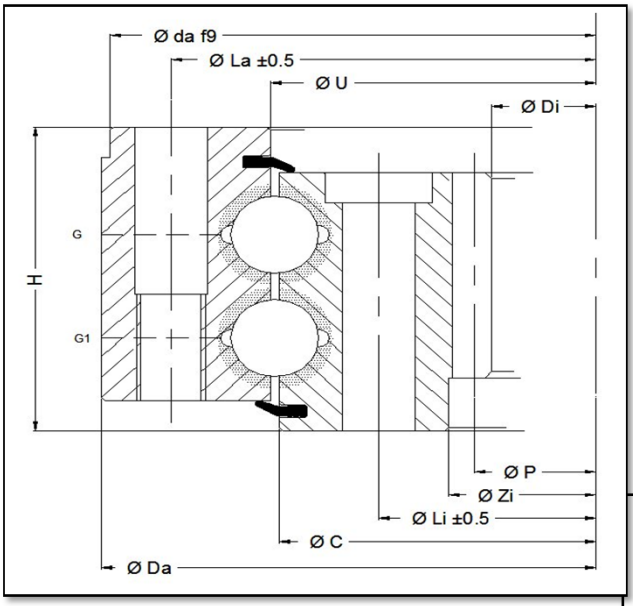

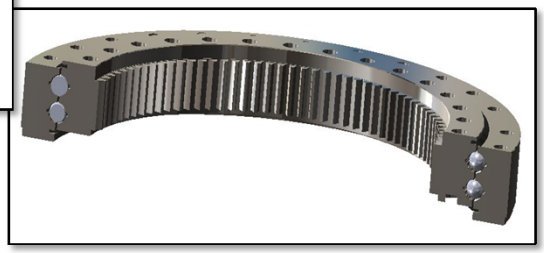

NBC Part	Outline dimensions & weight							
	D_a	D_i	U	C	H	d_a f9	Z_i	Weight
	mm	*mm*	*mm*	*mm*	*mm*	*mm*	mm	*kg*
SIGH 700 25 01 AA LM *1	700	485	602	598	100	695	500	119
SIG 976 2 20 01 AA LM	976	786	899	895	97	975	-	153
SIG 982 2 25 01 AA LM	982	754	887	883	97	980	790	170
SIGH 1072 2 25 01 AA LM *1	1072	831	976	980	97	1070	-	218

Notes *1 Gear hardened 56 +/- 4 HRc

NBC Part	Outer holes		Inner holes		20° spur gear			
	L_a	n_a	L_i	n_i	P	m	z	$F_{z\,MAX}$
	mm		*mm*		*mm*			*KN*
SIGH 700 25 01 AA LM *1	660	28 *2	540	30	485	5	97	47.5
SIG 976 2 20 01 AA LM	944	36	850	36	800	8	100	90.9
SIG 982 2 25 01 AA LM	944	36	826	36	760	8	95	90.9
SIGH 1072 2 25 01 AA LM *1	1035	36	922	36	840	12	70	155.8

Notes *2 Bolt holes not equally spaced.

Double row ball slew rings Static Load Charts

External gear

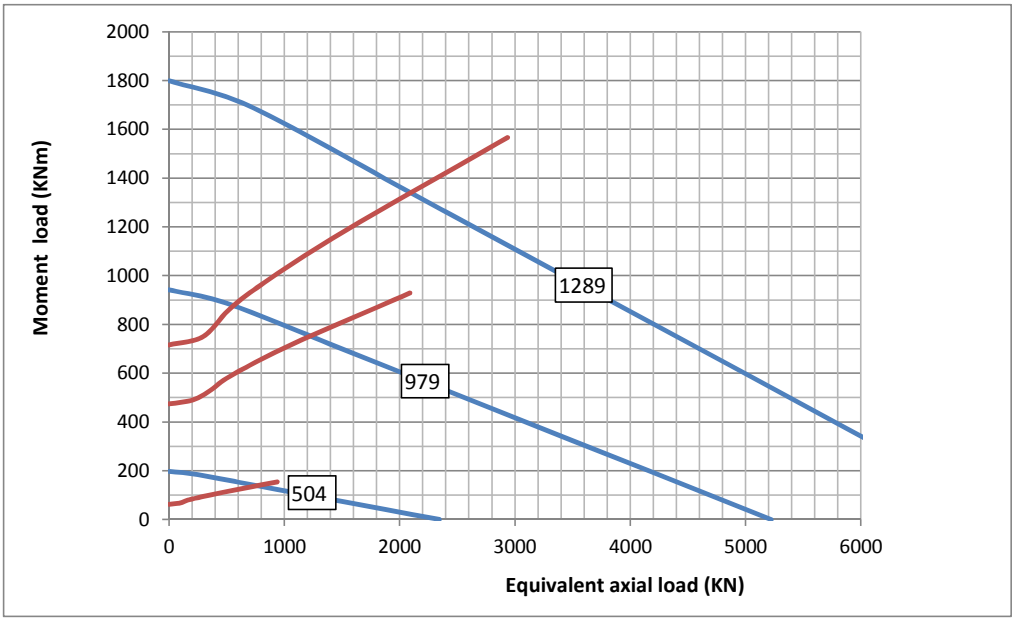

Internal gear

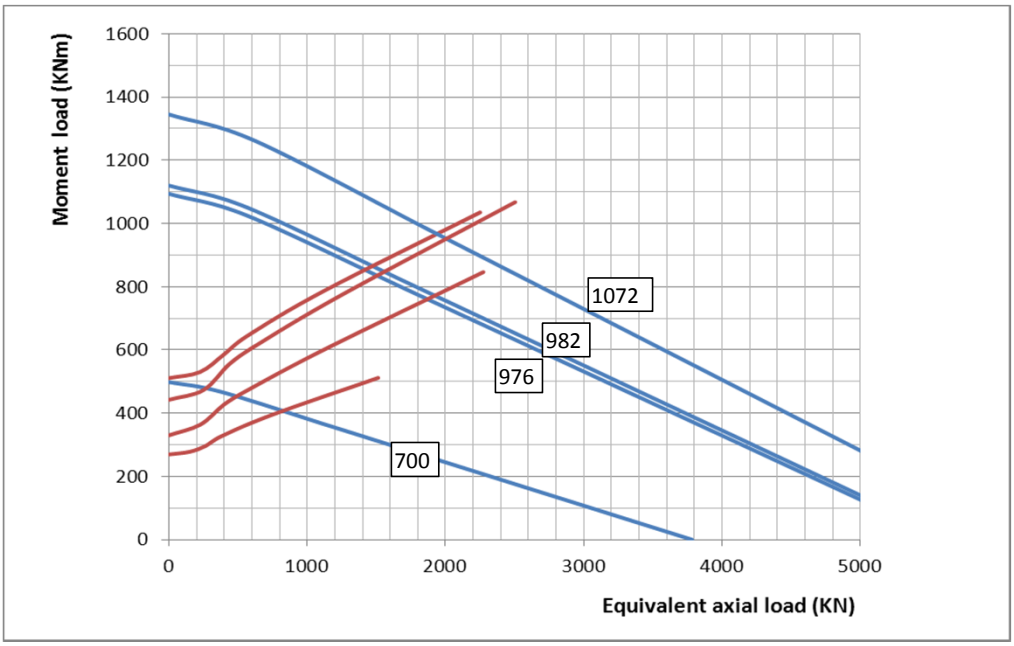

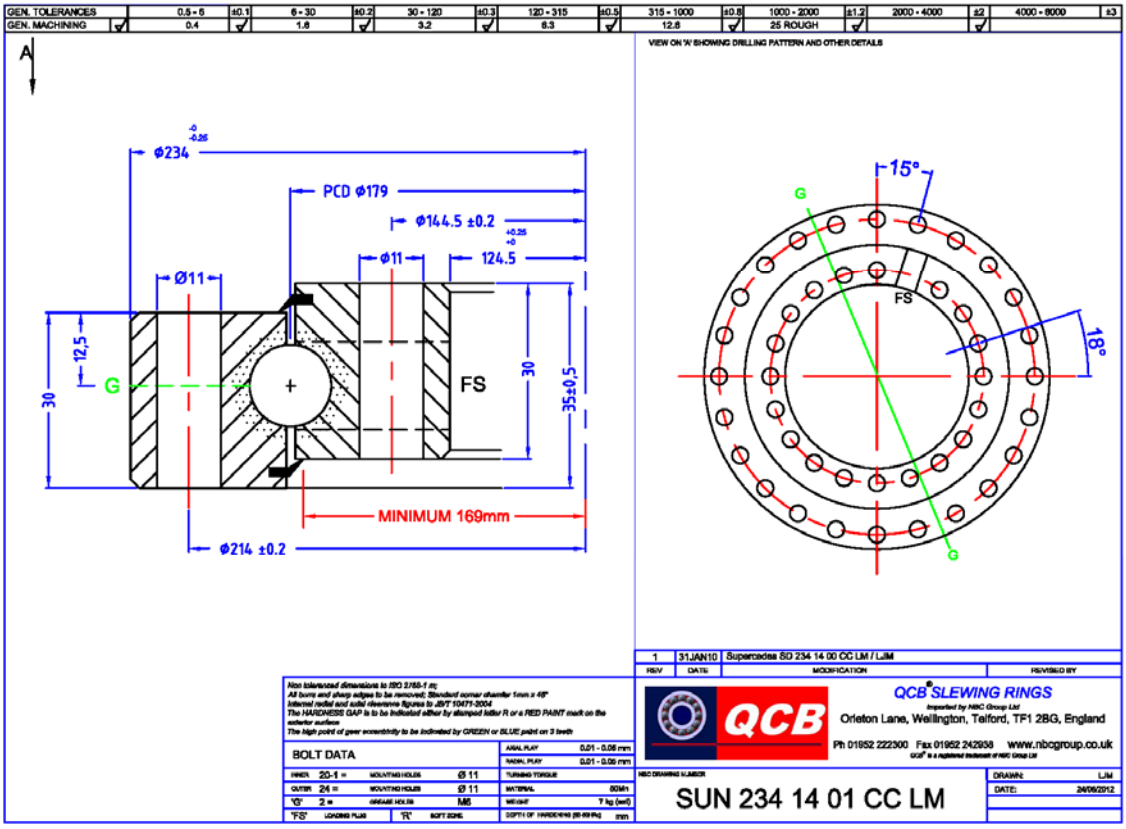
GEN. TOLERANCES
GEN. MACHINING
VIEW ON 'A' SHOWING DRILLING PATTERN AND OTHER DETAILS
Ø234
PCD Ø179
Ø144.5 ±0.2
Ø11
124.5
12.5
30
35±0.5
FS
MINIMUM 169mm
Ø214 ±0.2
15°
18°
1 31JAN10 Supercedes SD 234 14 00 CC LM / LJM
QCB SLEWING RINGS
Orleton Lane, Wellington, Telford, TF1 2BG, England
Ph 01952 222300 Fax 01952 242938 www.nbcgroup.co.uk
BOLT DATA
SUN 234 14 01 CC LM
DRAWN: LJM
DATE: 24/08/2012

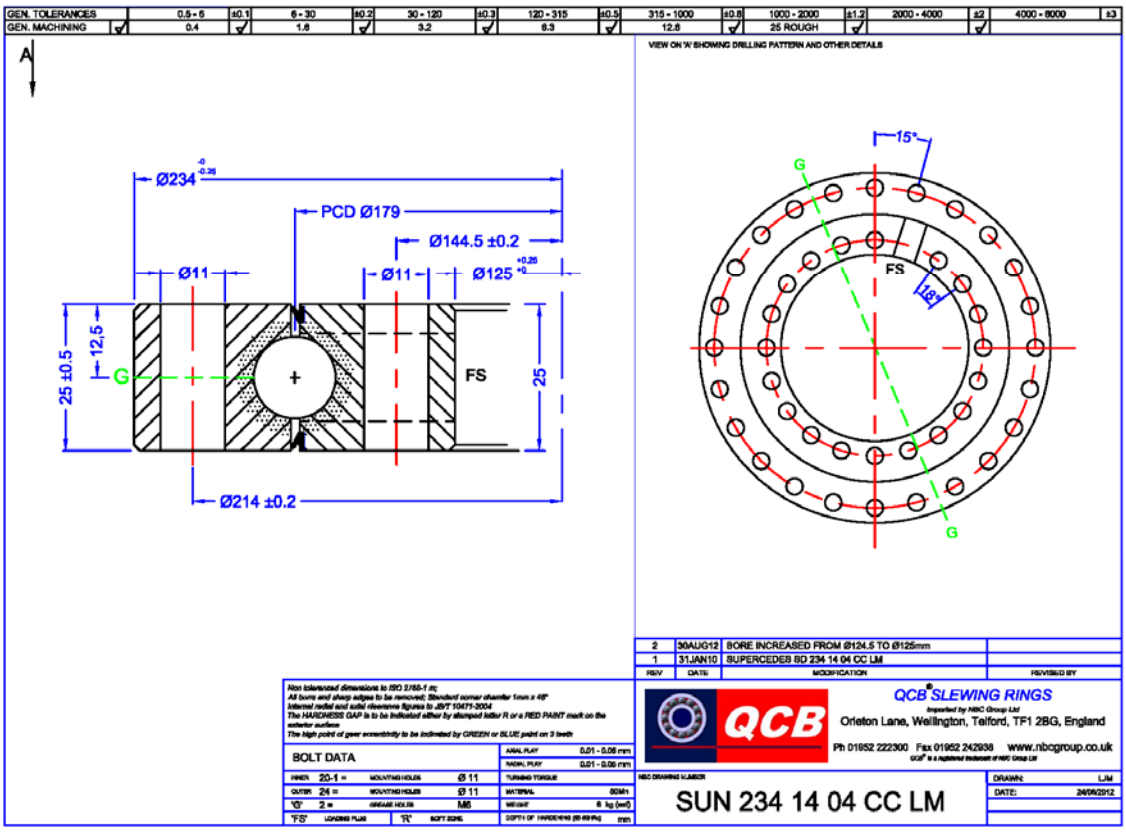
GEN. TOLERANCES
GEN. MACHINING
VIEW ON 'A' SHOWING DRILLING PATTERN AND OTHER DETAILS
Ø234
PCD Ø179
Ø144.5 ±0.2
Ø11
Ø125
12.5
25 ±0.5
25
FS
Ø214 ±0.2
15°
18°
2 30AUG12 BORE INCREASED FROM Ø124.5 TO Ø125mm
1 31JAN10 SUPERCEDES SD 234 14 04 CC LM
QCB SLEWING RINGS
Orleton Lane, Wellington, Telford, TF1 2BG, England
Ph 01952 222300 Fax 01952 242938 www.nbcgroup.co.uk
BOLT DATA
SUN 234 14 04 CC LM
DRAWN: LJM
DATE: 24/08/2012

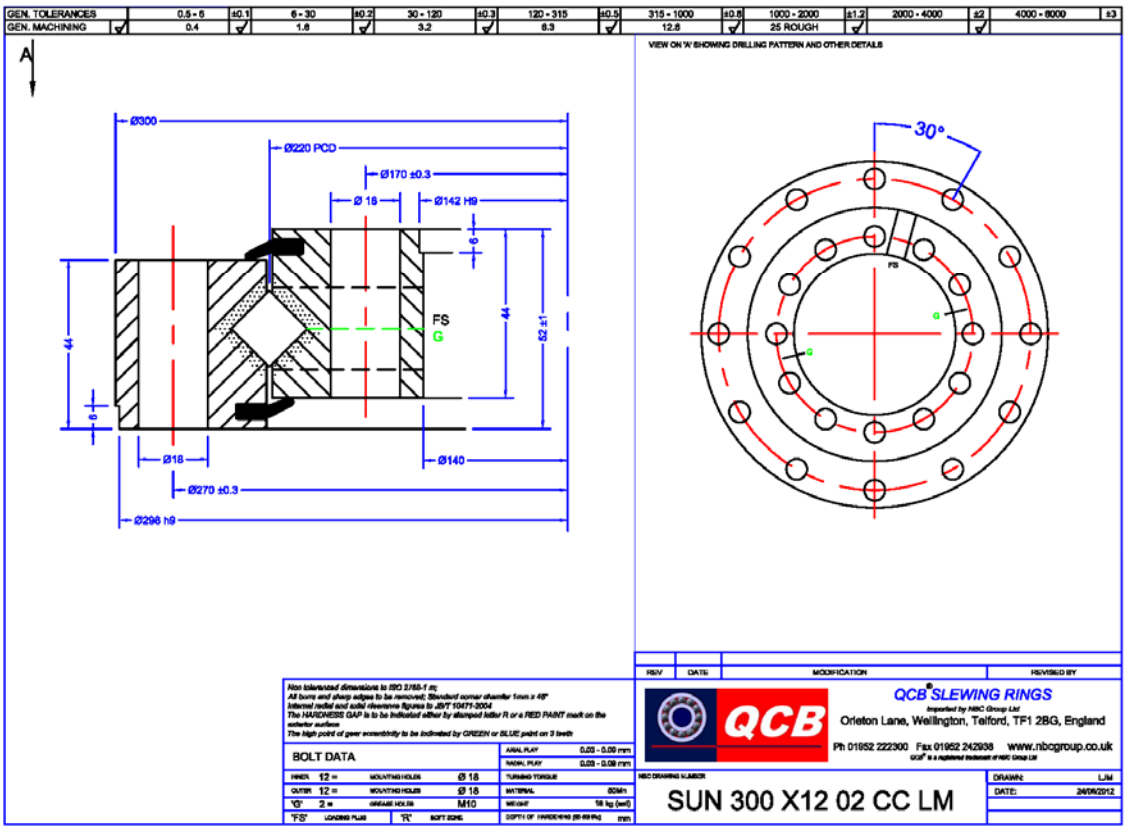
GEN. TOLERANCES
GEN. MACHINING
VIEW ON 'A' SHOWING DRILLING PATTERN AND OTHER DETAILS
Ø300
Ø220 PCD
Ø170 ±0.3
Ø 18
Ø142 H9
FS
G
44
52 ±1
Ø18
Ø140
Ø270 ±0.3
Ø296 h9
30°
BOLT DATA
QCB SLEWING RINGS
Orleton Lane, Wellington, Telford, TF1 2BG, England
Ph 01952 222300 Fax 01952 242938 www.nbcgroup.co.uk
SUN 300 X12 02 CC LM

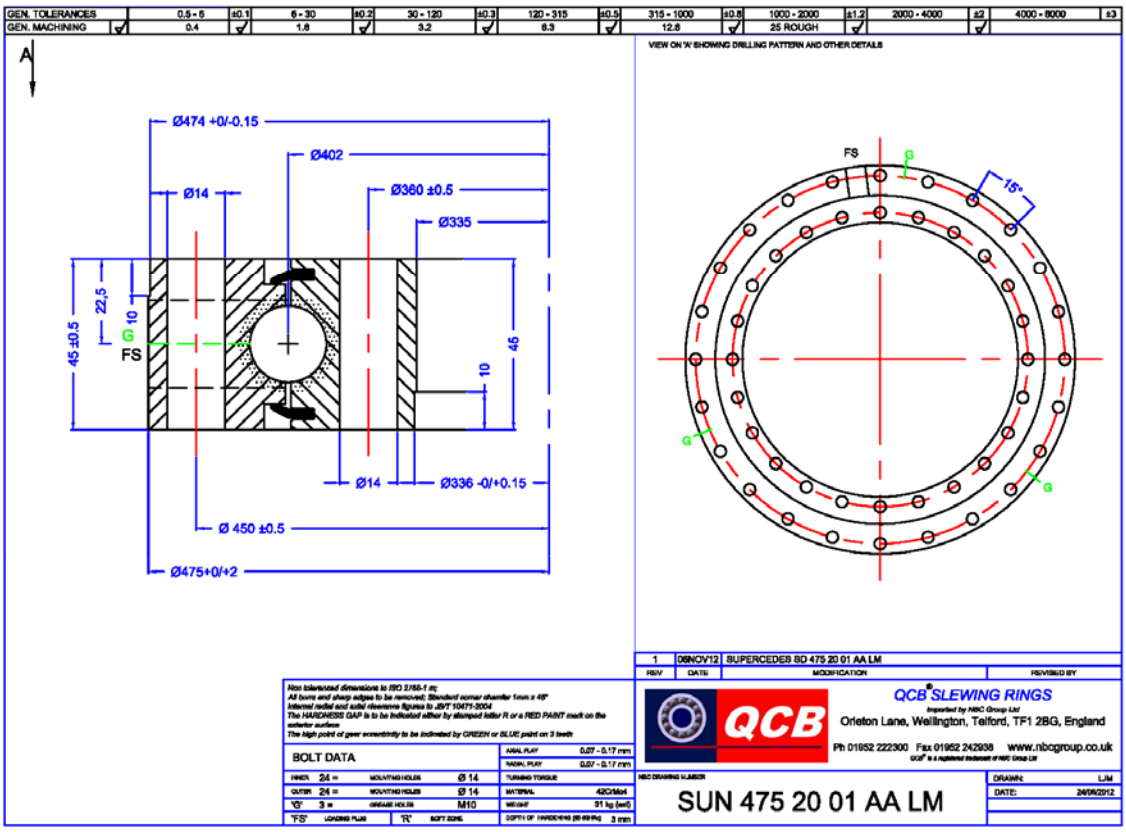
GEN. TOLERANCES
GEN. MACHINING
VIEW ON 'A' SHOWING DRILLING PATTERN AND OTHER DETAILS
Ø474 +0/-0.15
Ø402
Ø14
Ø360 ±0.5
Ø335
22,5
10
45 ±0.5
45
Ø14
Ø336 -0/+0.15
Ø 450 ±0.5
Ø475+0/+2
FS
G
15°
1 09NOV12 SUPERCEDES SD 475 20 01 AA LM
BOLT DATA
QCB SLEWING RINGS
Orleton Lane, Wellington, Telford, TF1 2BG, England
Ph 01952 222300 Fax 01952 242938 www.nbcgroup.co.uk
SUN 475 20 01 AA LM

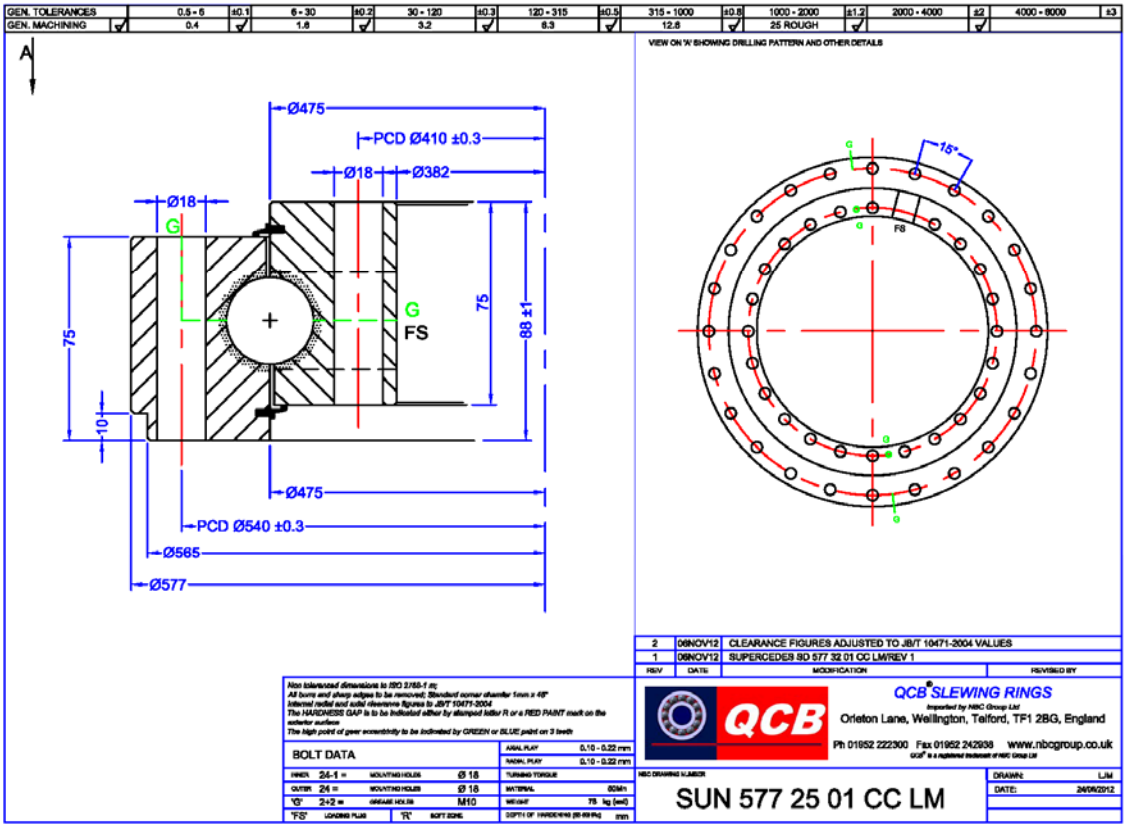
GEN. TOLERANCES
GEN. MACHINING
VIEW ON 'A' SHOWING DRILLING PATTERN AND OTHER DETAILS
Ø475
PCD Ø410 ±0.3
Ø18
Ø382
Ø18
G
G
FS
75
75
88 ±1
10
Ø475
PCD Ø540 ±0.3
Ø565
Ø577
15°
F8
2 08NOV12 CLEARANCE FIGURES ADJUSTED TO JB/T 10471-2004 VALUES
1 08NOV12 SUPERCEDES SD 577 32 01 CC LM/REV 1
BOLT DATA
QCB SLEWING RINGS
Orleton Lane, Wellington, Telford, TF1 2BG, England
Ph 01952 222300 Fax 01952 242938 www.nbcgroup.co.uk
SUN 577 25 01 CC LM

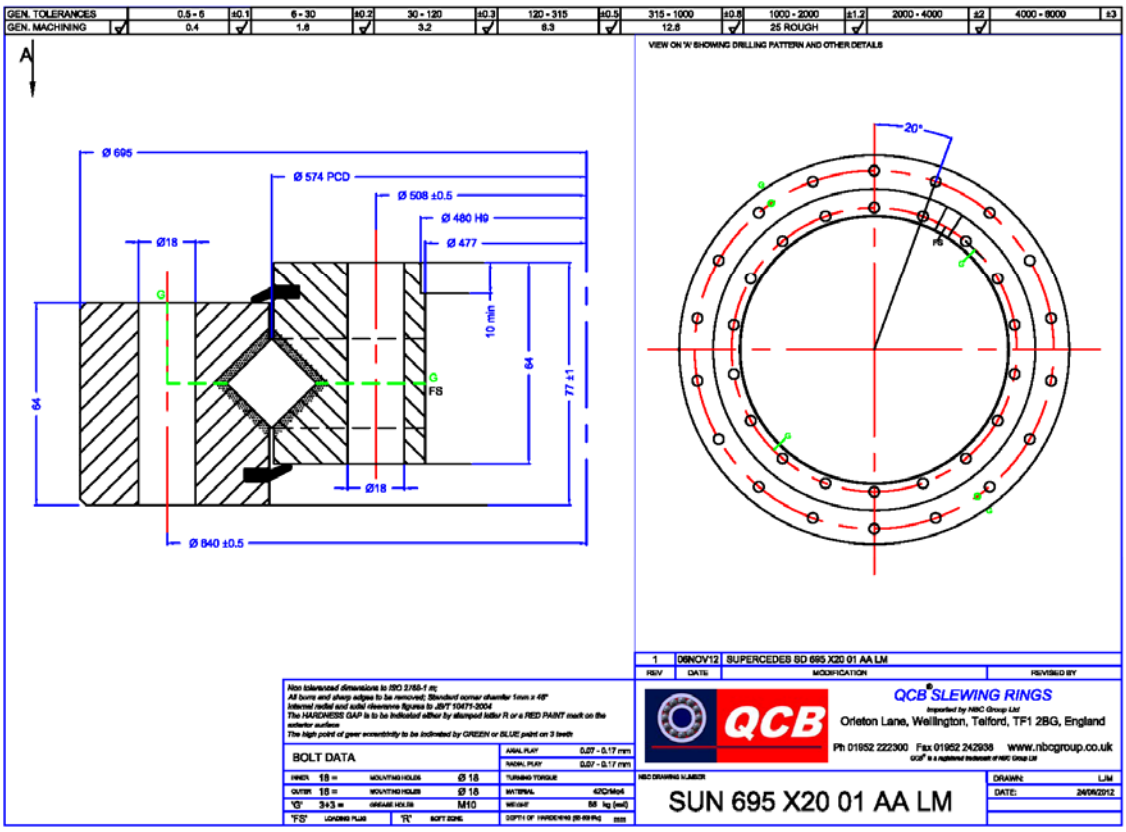
GEN. TOLERANCES
GEN. MACHINING
VIEW ON 'A' SHOWING DRILLING PATTERN AND OTHER DETAILS
Ø 695
Ø 574 PCD
Ø 508 ±0.5
Ø 480 H9
Ø 477
Ø18
G
G
F8
10 min
64
64
77 ±1
Ø18
Ø 640 ±0.5
20°
F6
1 08NOV12 SUPERCEDES SD 695 X20 01 AA LM
BOLT DATA
QCB SLEWING RINGS
Orleton Lane, Wellington, Telford, TF1 2BG, England
Ph 01952 222300 Fax 01952 242938 www.nbcgroup.co.uk
SUN 695 X20 01 AA LM

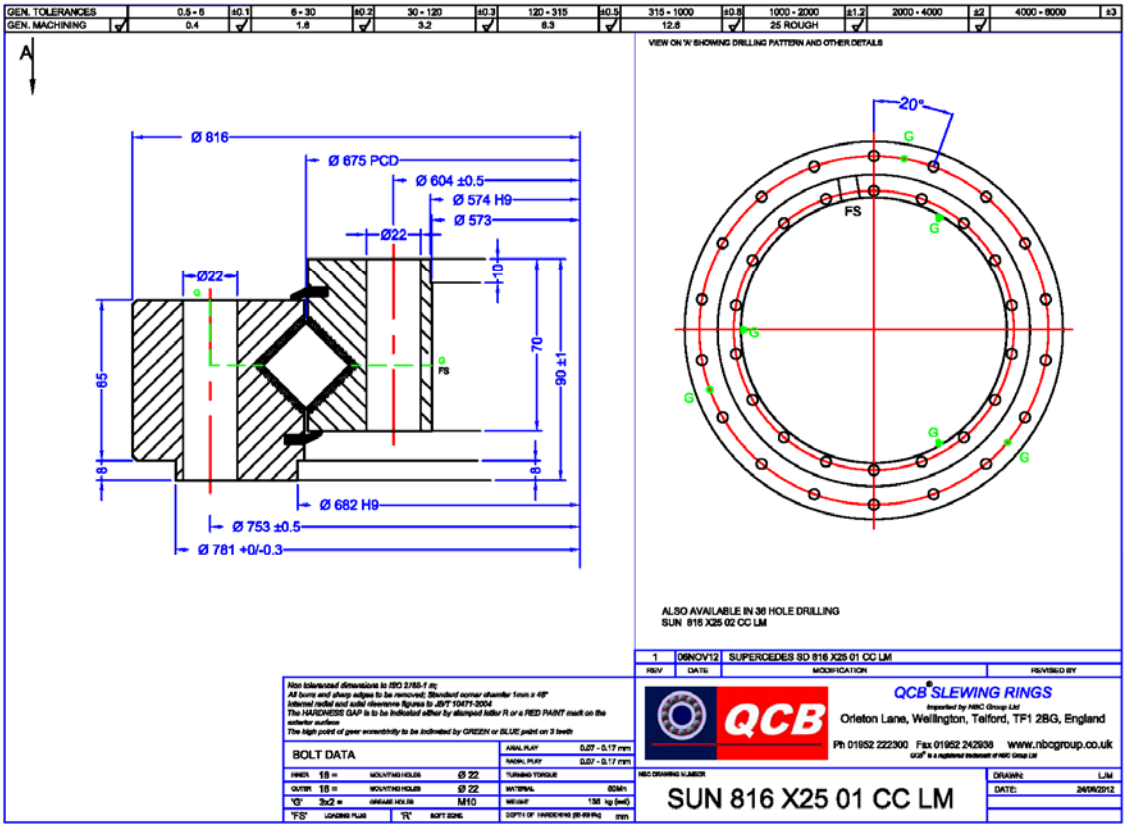
GEN. TOLERANCES
GEN. MACHINING
VIEW ON 'A' SHOWING DRILLING PATTERN AND OTHER DETAILS
Ø 816
Ø 675 PCD
Ø 604 ±0.5
Ø 574 H9
Ø 573
Ø22
Ø22
10
70
90 ±1
65
8
8
Ø 682 H9
Ø 753 ±0.5
Ø 781 +0/-0.3
20°
G
FS
ALSO AVAILABLE IN 36 HOLE DRILLING
SUN 816 X25 02 CC LM
1 06NOV12 SUPERCEDES SD 816 X25 01 CC LM
BOLT DATA
QCB SLEWING RINGS
Orleton Lane, Wellington, Telford, TF1 2BG, England
Ph 01952 222300 Fax 01952 242938 www.nbcgroup.co.uk
SUN 816 X25 01 CC LM

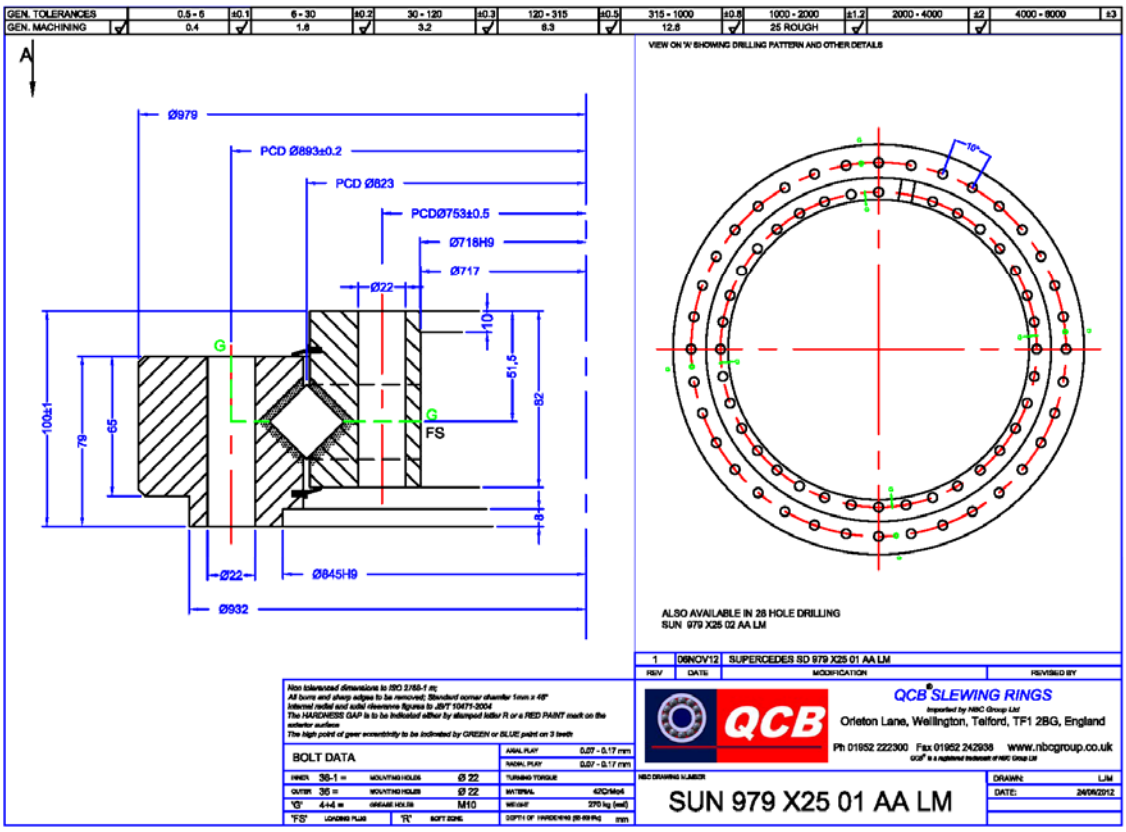
GEN. TOLERANCES
GEN. MACHINING
VIEW ON 'A' SHOWING DRILLING PATTERN AND OTHER DETAILS
Ø979
PCD Ø893±0.2
PCD Ø823
PCDØ753±0.5
Ø718H9
Ø717
Ø22
10
51.5
82
100±1
79
65
8
Ø22
Ø845H9
Ø932
G
FS
ALSO AVAILABLE IN 28 HOLE DRILLING
SUN 979 X25 02 AA LM
1 06NOV12 SUPERCEDES SD 979 X25 01 AA LM
BOLT DATA
QCB SLEWING RINGS
Orleton Lane, Wellington, Telford, TF1 2BG, England
Ph 01952 222300 Fax 01952 242938 www.nbcgroup.co.uk
SUN 979 X25 01 AA LM

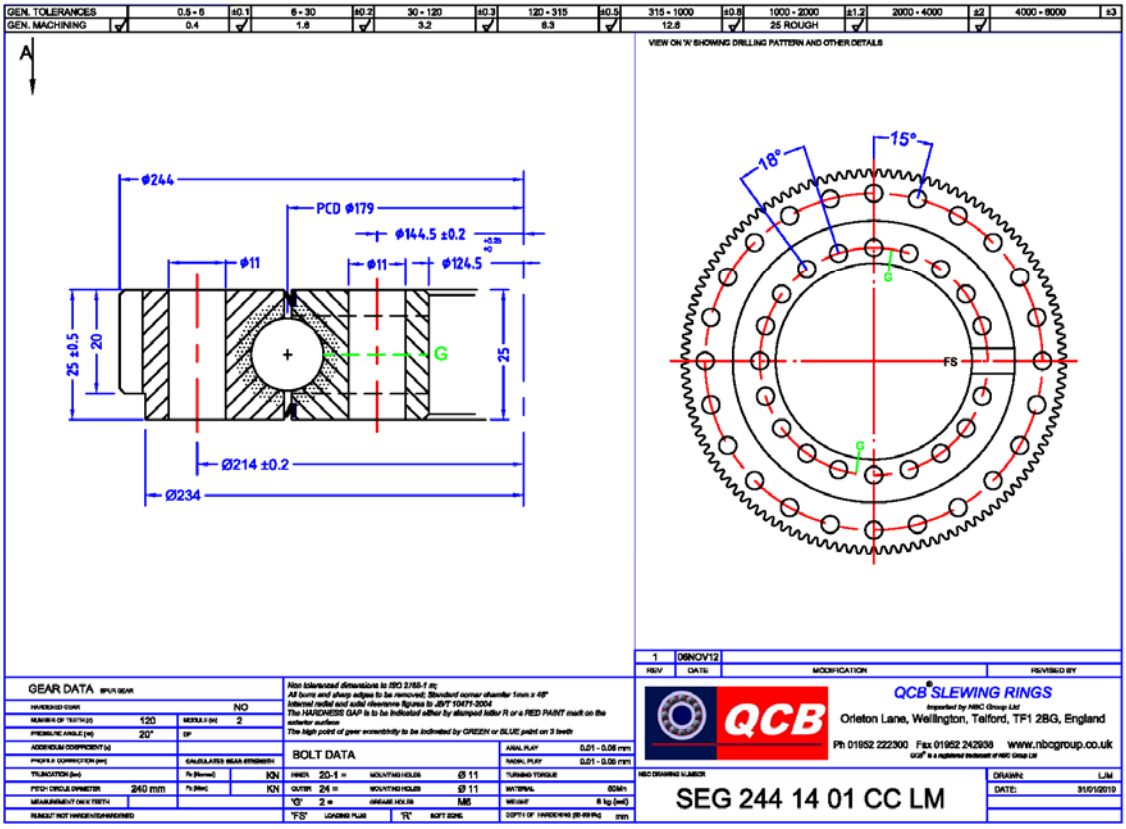
GEN. TOLERANCES
GEN. MACHINING
VIEW ON 'A' SHOWING DRILLING PATTERN AND OTHER DETAILS
ø244
PCD ø179
ø144.5 ±0.2
ø11
ø124.5
25 ±0.5
20
25
G
Ø214 ±0.2
Ø234
18°
15°
FS
GEAR DATA
BOLT DATA
QCB SLEWING RINGS
Orleton Lane, Wellington, Telford, TF1 2BG, England
Ph 01952 222300 Fax 01952 242938 www.nbcgroup.co.uk
SEG 244 14 01 CC LM
DRAWN: LJM
DATE: 31/01/2019

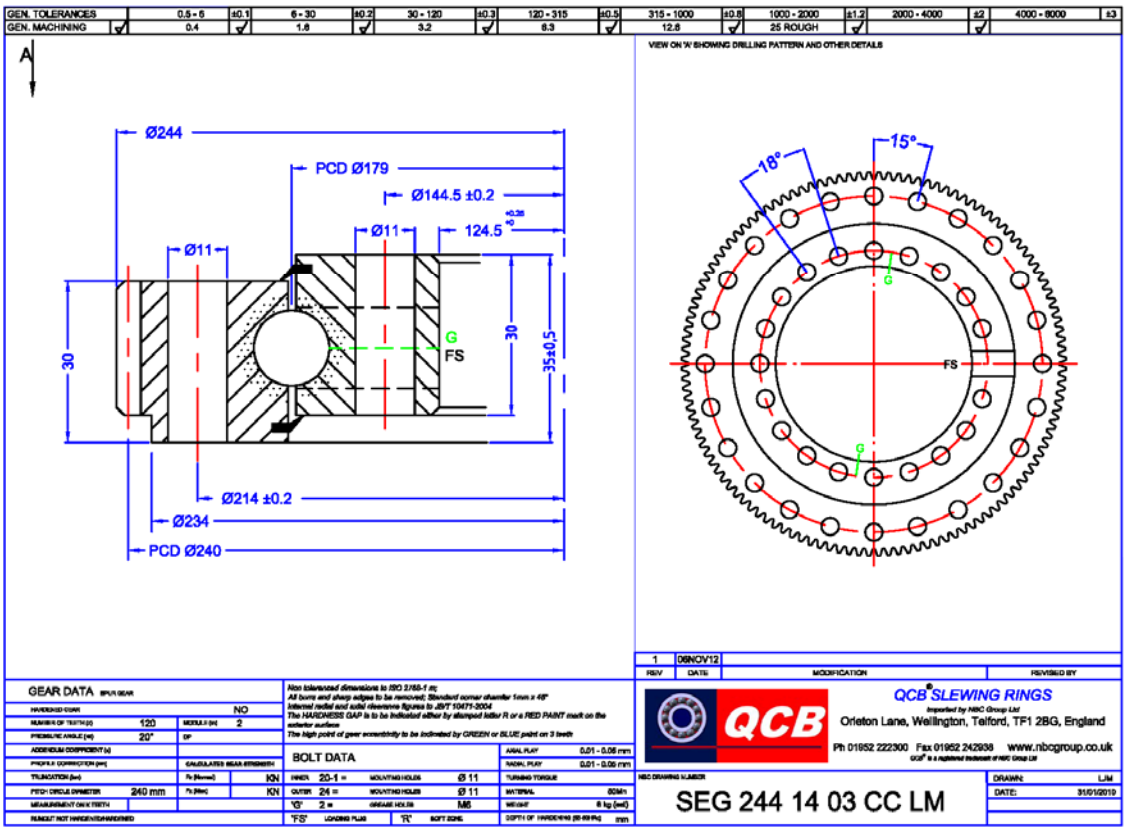
GEN. TOLERANCES
GEN. MACHINING
VIEW ON 'A' SHOWING DRILLING PATTERN AND OTHER DETAILS
Ø244
PCD Ø179
Ø144.5 ±0.2
Ø11
124.5
30
35±0.5
G
FS
Ø214 ±0.2
Ø234
PCD Ø240
18°
15°
GEAR DATA
BOLT DATA
QCB SLEWING RINGS
Orleton Lane, Wellington, Telford, TF1 2BG, England
Ph 01952 222300 Fax 01952 242938 www.nbcgroup.co.uk
SEG 244 14 03 CC LM
DRAWN: LJM
DATE: 31/01/2019

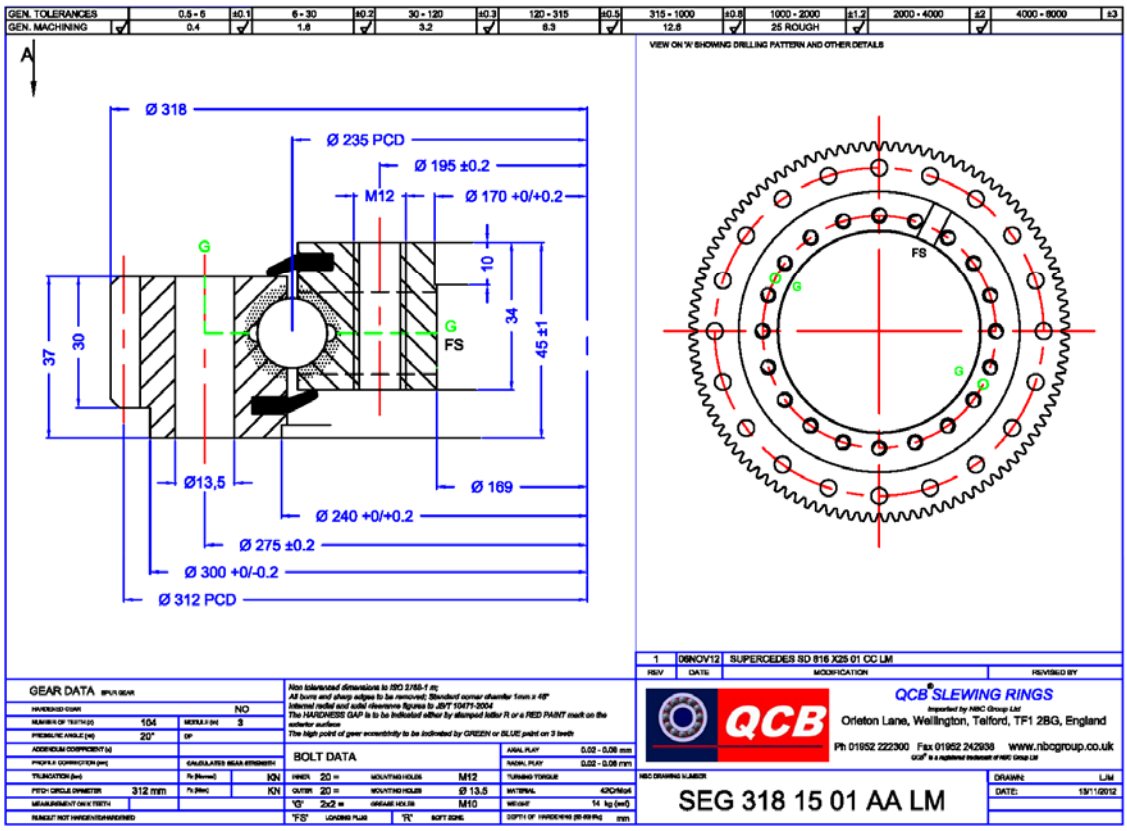
GEN. TOLERANCES
GEN. MACHINING
VIEW ON 'A' SHOWING DRILLING PATTERN AND OTHER DETAILS
Ø 318
Ø 235 PCD
Ø 195 ±0.2
M12
Ø 170 +0/+0.2
10
34
45 ±1
37
30
Ø13,5
Ø 169
Ø 240 +0/+0.2
Ø 275 ±0.2
Ø 300 +0/-0.2
Ø 312 PCD
G
FS
1 08NOV12 SUPERCEDES SD 816 X25 01 CC LM
GEAR DATA
BOLT DATA
QCB SLEWING RINGS
Orleton Lane, Wellington, Telford, TF1 2BG, England
Ph 01952 222300 Fax 01952 242938 www.nbcgroup.co.uk
SEG 318 15 01 AA LM

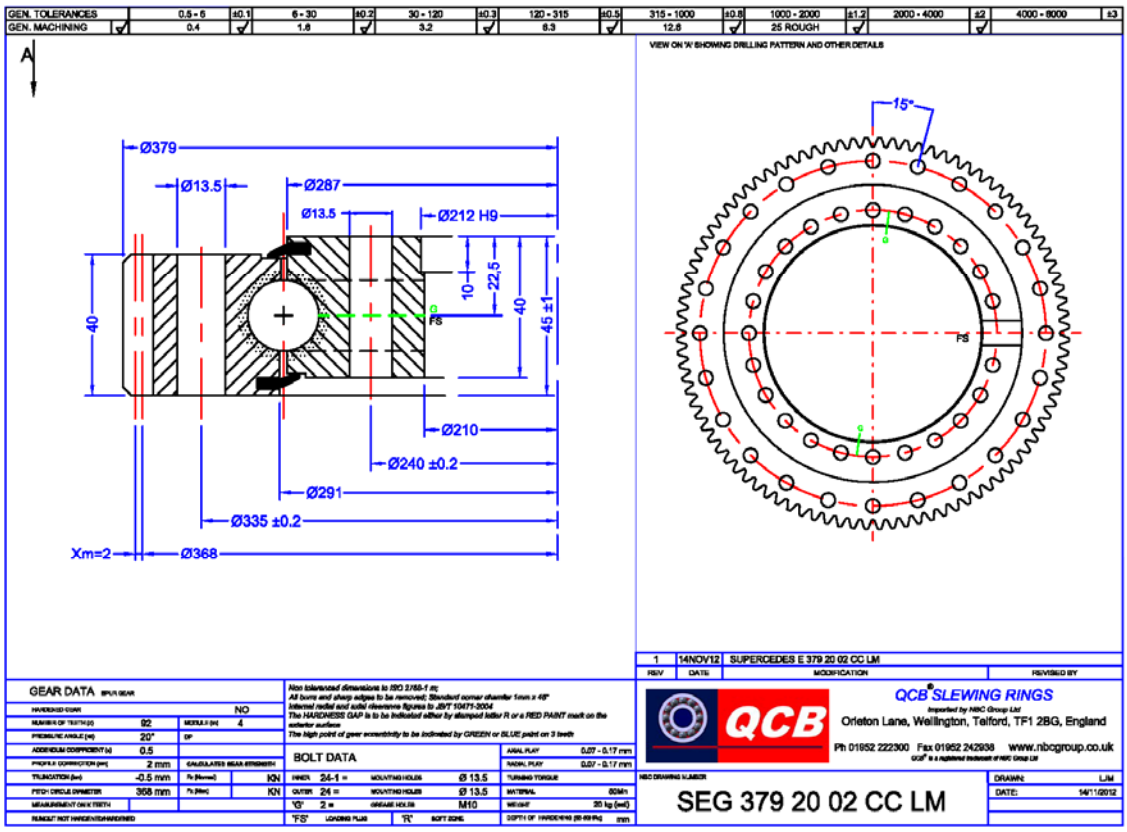
GEN. TOLERANCES
GEN. MACHINING
VIEW ON 'A' SHOWING DRILLING PATTERN AND OTHER DETAILS
Ø379
Ø13.5
Ø287
Ø13.5
Ø212 H9
10
22,5
40
45 ±1
40
Ø210
Ø240 ±0.2
Ø291
Ø335 ±0.2
Xm=2
Ø368
15°
FS
1 14NOV12 SUPERCEDES E 379 20 02 CC LM
GEAR DATA
BOLT DATA
QCB SLEWING RINGS
Orleton Lane, Wellington, Telford, TF1 2BG, England
Ph 01952 222300 Fax 01952 242938 www.nbcgroup.co.uk
SEG 379 20 02 CC LM

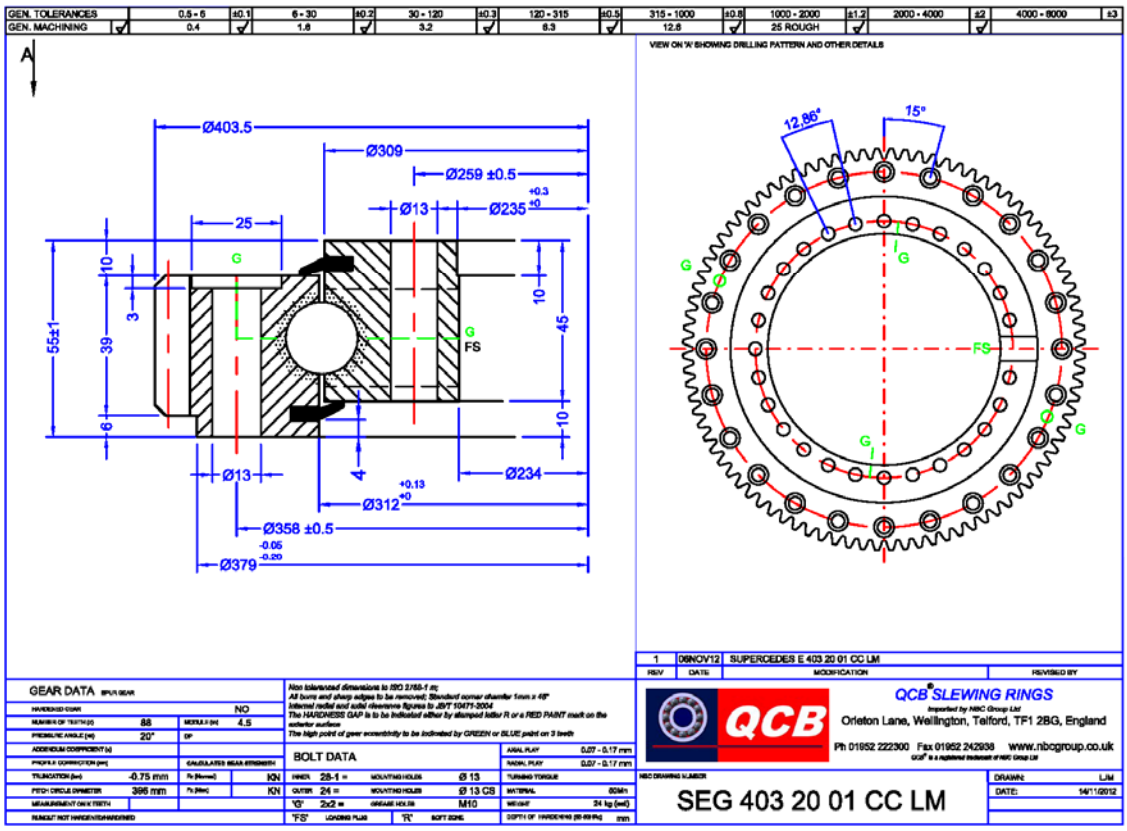
GEN. TOLERANCES
GEN. MACHINING
VIEW ON 'A' SHOWING DRILLING PATTERN AND OTHER DETAILS
Ø403.5
Ø309
Ø259 ±0.5
Ø13
Ø235
25
10
3
39
55±1
6
45
4
Ø234
Ø312
Ø358 ±0.5
Ø379
12.86°
15°
FS
1 08NOV12 SUPERCEDES E 403 20 01 CC LM
GEAR DATA
BOLT DATA
QCB SLEWING RINGS
Orleton Lane, Wellington, Telford, TF1 2BG, England
Ph 01952 222300 Fax 01952 242938 www.nbcgroup.co.uk
SEG 403 20 01 CC LM

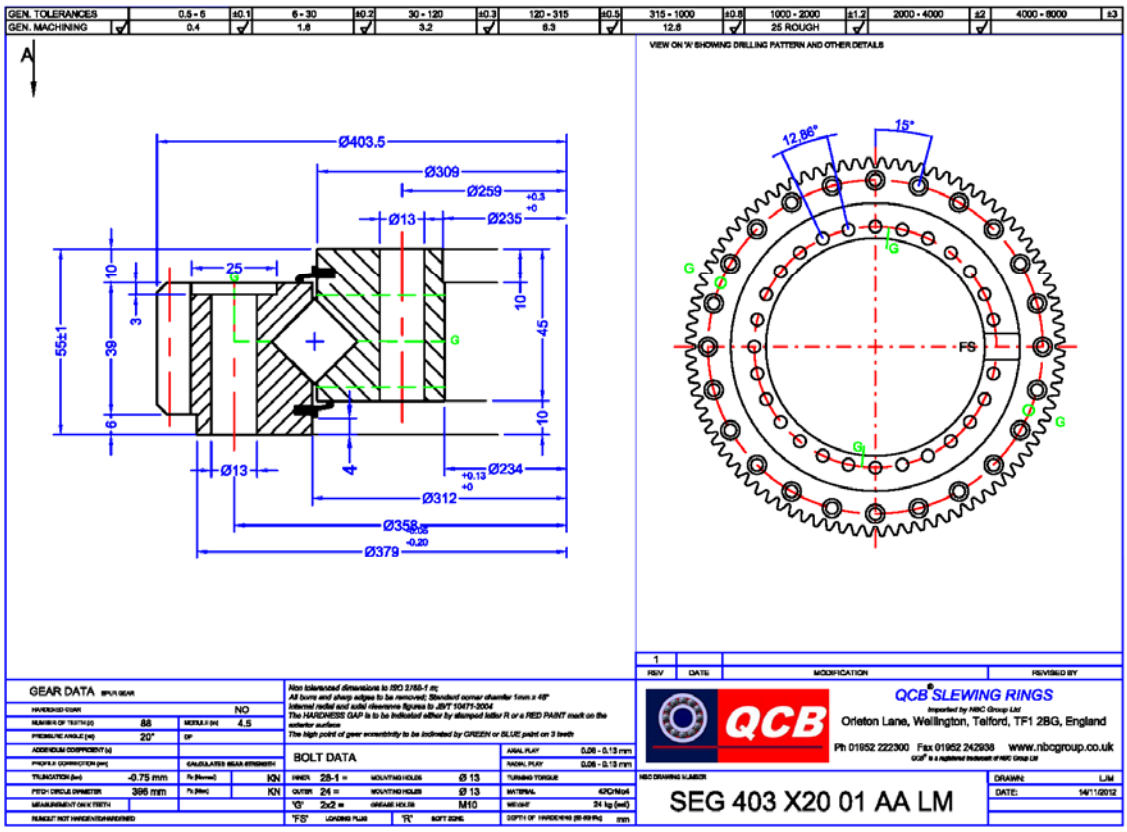
GEN. TOLERANCES
GEN. MACHINING
VIEW ON 'A' SHOWING DRILLING PATTERN AND OTHER DETAILS
Ø403.5
Ø309
Ø259
Ø13
Ø235
25
10
3
39
55±1
6
45
4
Ø234
Ø312
Ø358
Ø379
12.86°
15°
FS
GEAR DATA
BOLT DATA
QCB SLEWING RINGS
Orleton Lane, Wellington, Telford, TF1 2BG, England
Ph 01952 222300 Fax 01952 242938 www.nbcgroup.co.uk
SEG 403 X20 01 AA LM

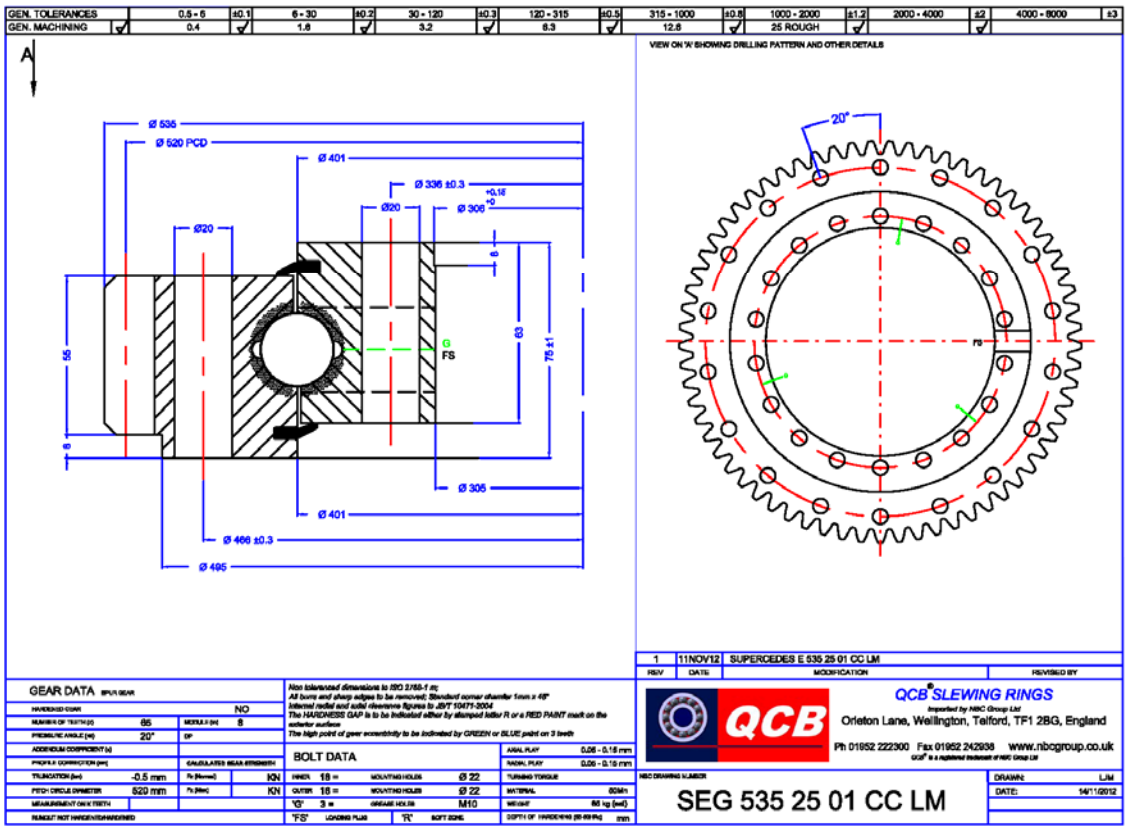
GEN. TOLERANCES
GEN. MACHINING
VIEW ON 'A' SHOWING DRILLING PATTERN AND OTHER DETAILS
Ø 535
Ø 520 PCD
Ø 401
Ø 336 ±0.3
Ø20
Ø 306
Ø 305
Ø 466 ±0.3
Ø 495
20°
1 11NOV12 SUPERCEDES E 535 25 01 CC LM
GEAR DATA
BOLT DATA
QCB SLEWING RINGS
Orleton Lane, Wellington, Telford, TF1 2BG, England
Ph 01952 222300 Fax 01952 242938 www.nbcgroup.co.uk
SEG 535 25 01 CC LM

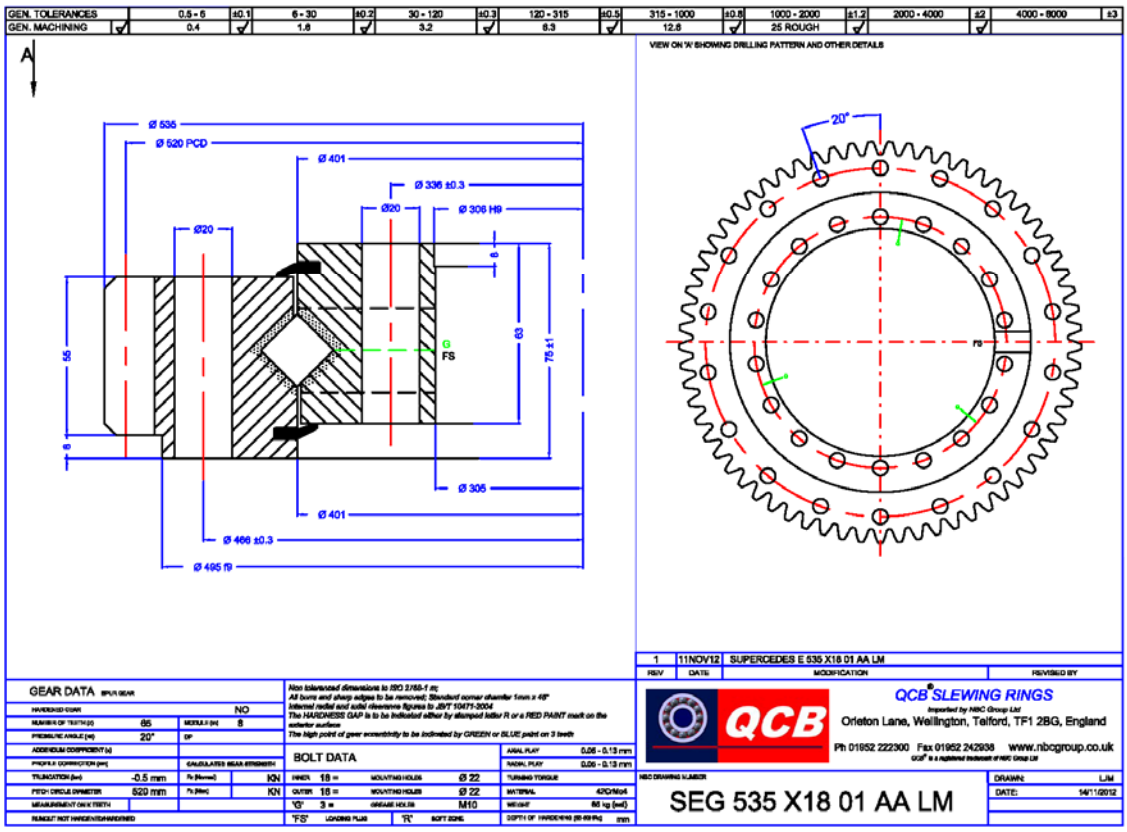
GEN. TOLERANCES
GEN. MACHINING
VIEW ON 'A' SHOWING DRILLING PATTERN AND OTHER DETAILS
Ø 535
Ø 520 PCD
Ø 401
Ø 336 ±0.3
Ø20
Ø 306 H9
Ø 305
Ø 466 ±0.3
Ø 495 f9
20°
1 11NOV12 SUPERCEDES E 535 X18 01 AA LM
GEAR DATA
BOLT DATA
QCB SLEWING RINGS
Orleton Lane, Wellington, Telford, TF1 2BG, England
Ph 01952 222300 Fax 01952 242938 www.nbcgroup.co.uk
SEG 535 X18 01 AA LM

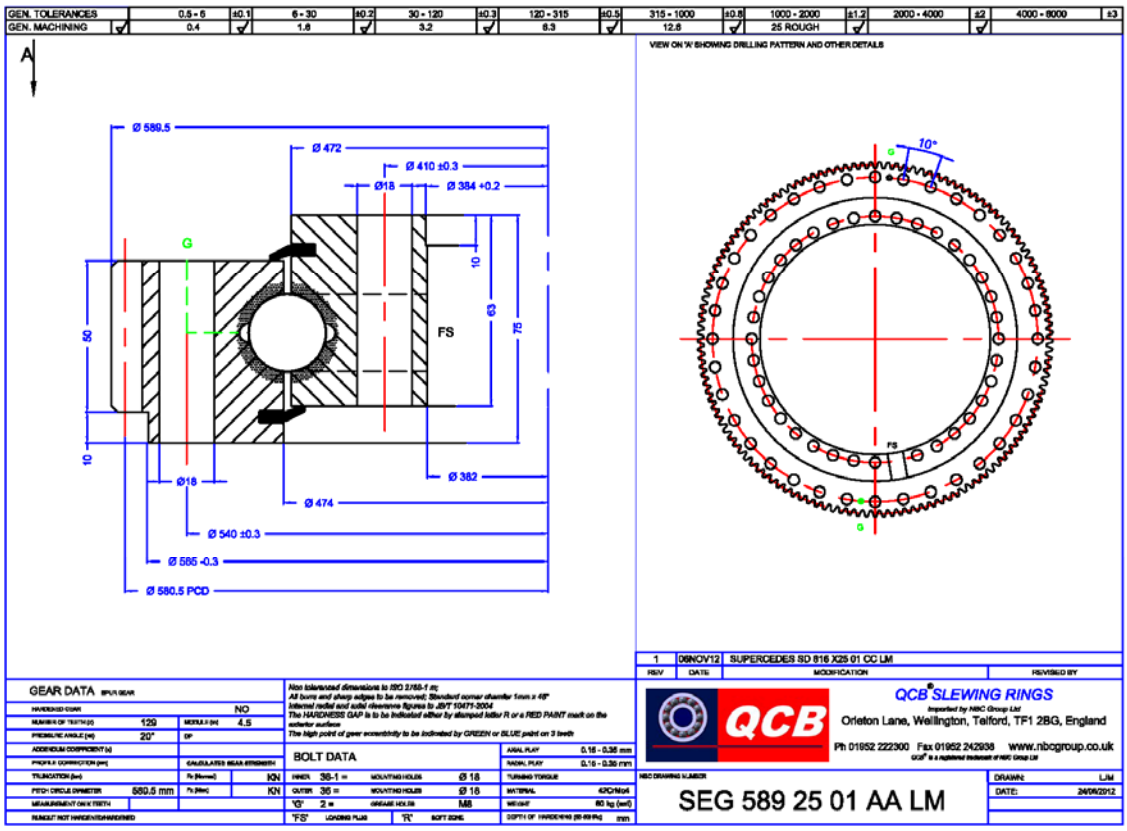
GEN. TOLERANCES
GEN. MACHINING
VIEW ON 'A' SHOWING DRILLING PATTERN AND OTHER DETAILS
Ø 589.5
Ø 472
Ø 410 ±0.3
Ø18
Ø 384 +0.2
G
10
63
75
50
FS
10
Ø18
Ø 382
Ø 474
Ø 540 ±0.3
Ø 555 -0.3
Ø 580.5 PCD
10°
1 08NOV12 SUPERCEDES SD 816 X25 01 CC LM
GEAR DATA
BOLT DATA
QCB SLEWING RINGS
Orleton Lane, Wellington, Telford, TF1 2BG, England
Ph 01952 222300 Fax 01952 242938 www.nbcgroup.co.uk
SEG 589 25 01 AA LM

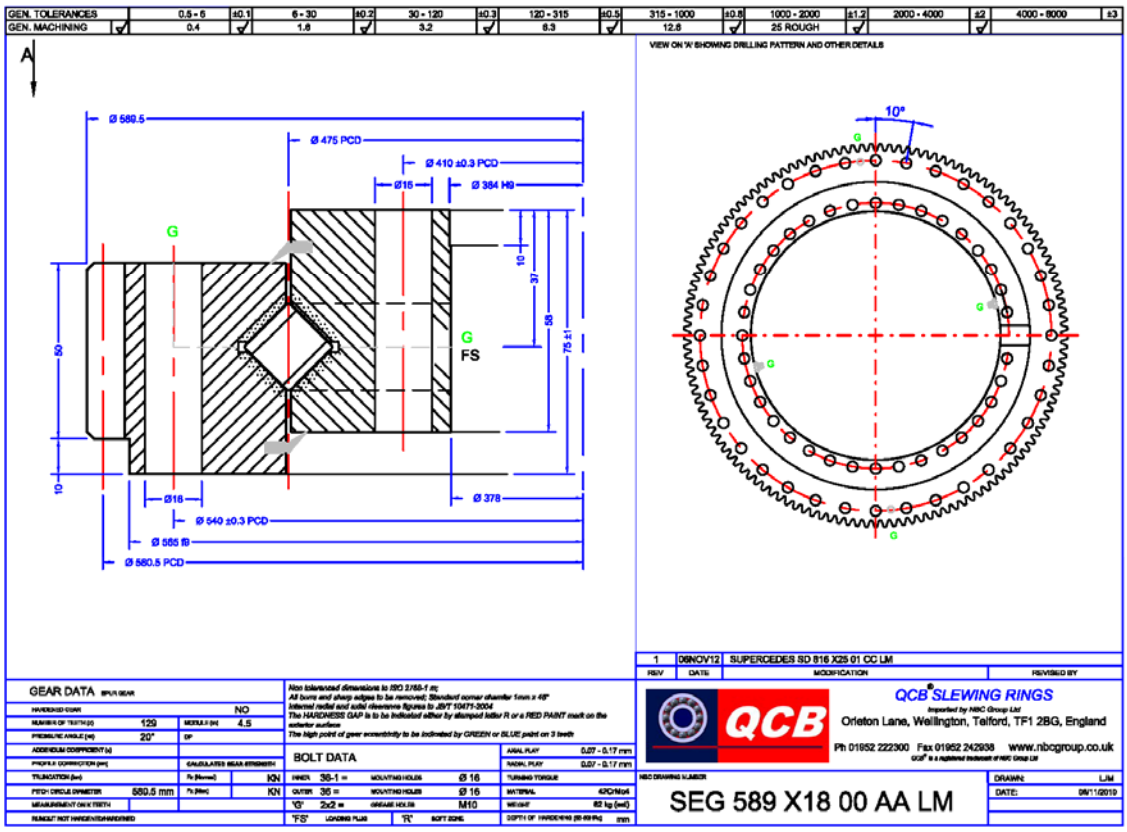
GEN. TOLERANCES
GEN. MACHINING
VIEW ON 'A' SHOWING DRILLING PATTERN AND OTHER DETAILS
Ø 589.5
Ø 475 PCD
Ø 410 ±0.3 PCD
Ø18
Ø 384 H9
G
10
37
58
75 ±1
50
G
FS
10
Ø18
Ø 378
Ø 540 ±0.3 PCD
Ø 555 f9
Ø 580.5 PCD
10°
1 08NOV12 SUPERCEDES SD 816 X25 01 CC LM
GEAR DATA
BOLT DATA
QCB SLEWING RINGS
Orleton Lane, Wellington, Telford, TF1 2BG, England
Ph 01952 222300 Fax 01952 242938 www.nbcgroup.co.uk
SEG 589 X18 00 AA LM

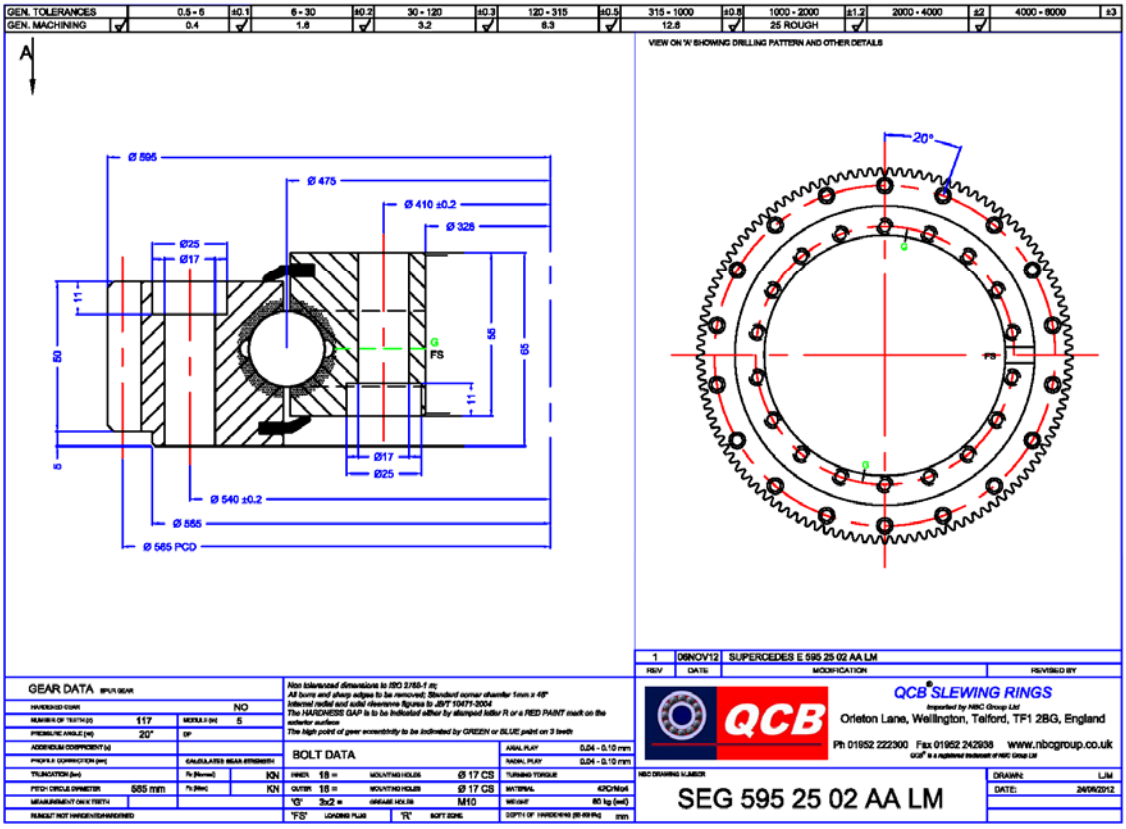
GEN. TOLERANCES
GEN. MACHINING
VIEW ON 'A' SHOWING DRILLING PATTERN AND OTHER DETAILS
Ø 595
Ø 475
Ø 410 ±0.2
Ø 328
Ø25
Ø17
Ø 540 ±0.2
Ø 555
Ø 565 PCD
20°
GEAR DATA
BOLT DATA
QCB SLEWING RINGS
Orleton Lane, Wellington, Telford, TF1 2BG, England
Ph 01952 222300 Fax 01952 242938 www.nbcgroup.co.uk
SEG 595 25 02 AA LM

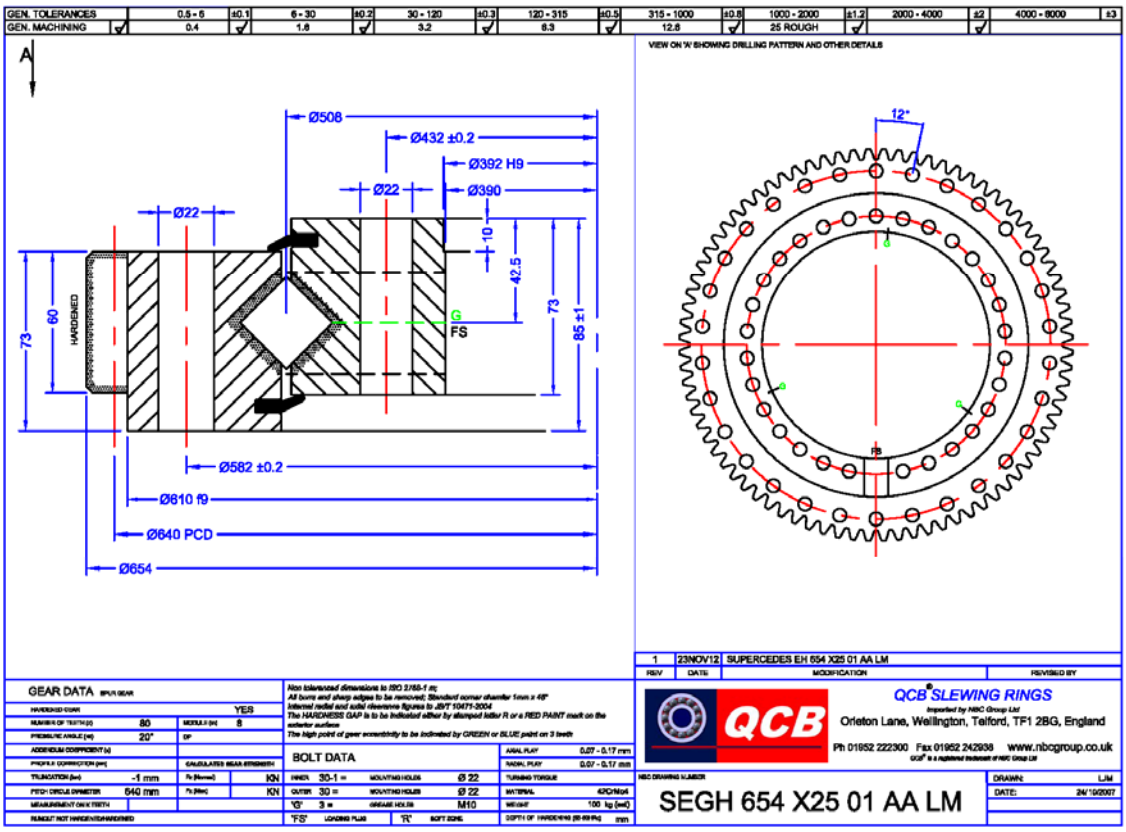
GEN. TOLERANCES
GEN. MACHINING
VIEW ON 'A' SHOWING DRILLING PATTERN AND OTHER DETAILS
Ø508
Ø432 ±0.2
Ø392 H9
Ø390
Ø22
Ø582 ±0.2
Ø610 f9
Ø640 PCD
Ø654
HARDENED
12°
GEAR DATA
BOLT DATA
QCB SLEWING RINGS
Orleton Lane, Wellington, Telford, TF1 2BG, England
Ph 01952 222300 Fax 01952 242938 www.nbcgroup.co.uk
SEGH 654 X25 01 AA LM

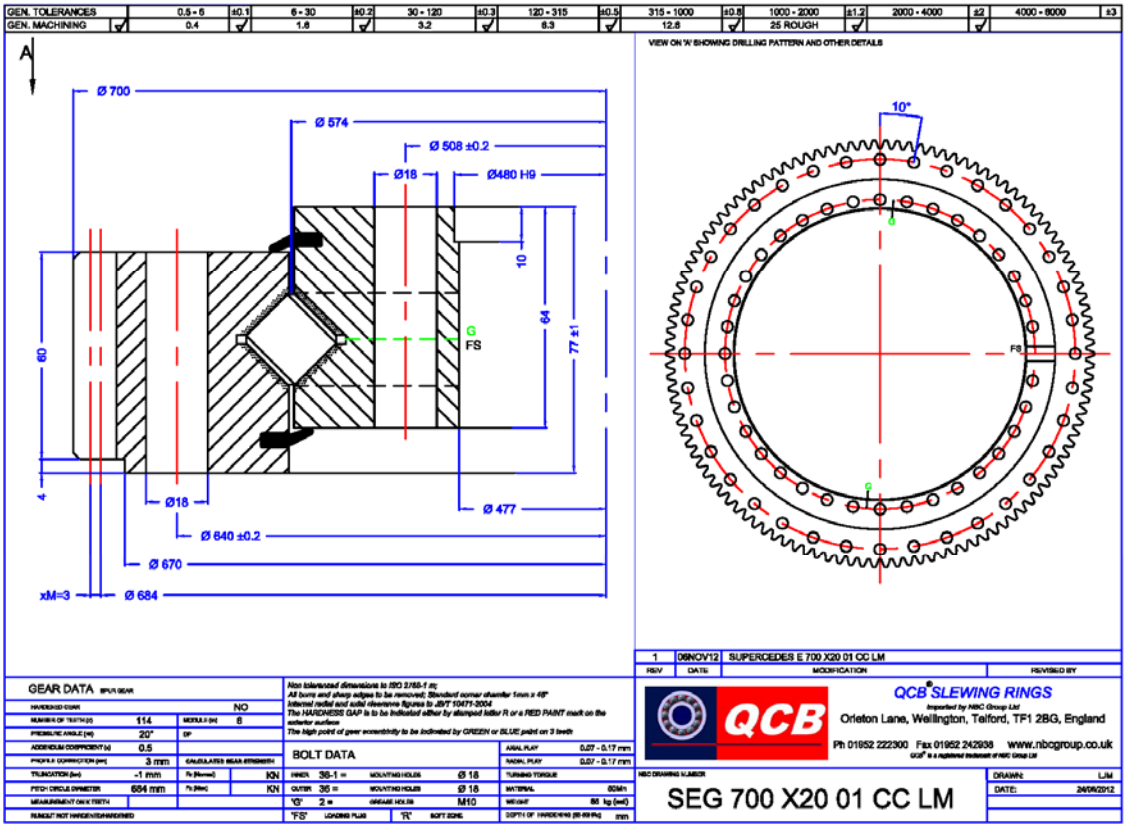
GEN. TOLERANCES
GEN. MACHINING
Ø 700
Ø 574
Ø 508 ±0.2
Ø18
Ø480 H9
10
64
77 ±1
60
4
Ø18
Ø 477
Ø 640 ±0.2
Ø 670
xM=3
Ø 684
10°
VIEW ON 'A' SHOWING DRILLING PATTERN AND OTHER DETAILS
1 09NOV12 SUPERCEDES E 700 X20 01 CC LM
GEAR DATA
BOLT DATA
QCB SLEWING RINGS
Orleton Lane, Wellington, Telford, TF1 2BG, England
Ph 01952 222300 Fax 01952 242938 www.nbcgroup.co.uk
SEG 700 X20 01 CC LM

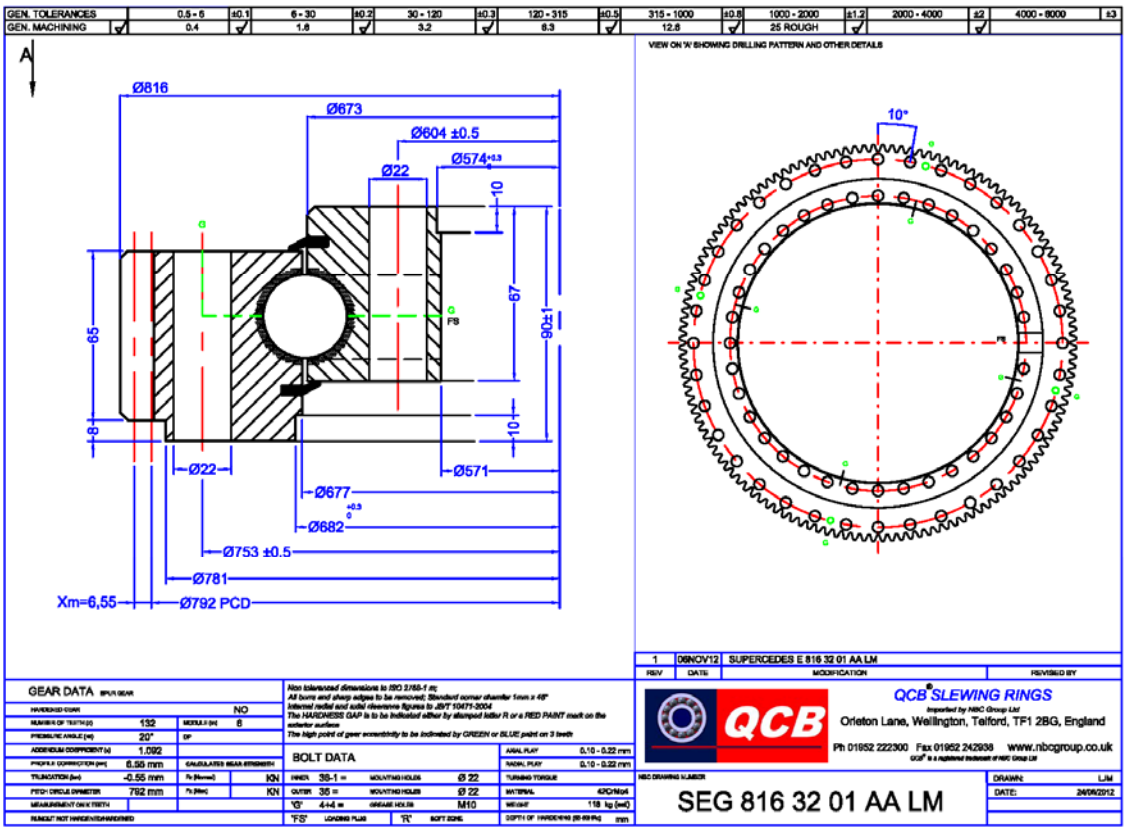
GEN. TOLERANCES
GEN. MACHINING
Ø816
Ø673
Ø604 ±0.5
Ø574
Ø22
10
67
90±1
65
8
10
Ø22
Ø571
Ø677
Ø682
Ø753 ±0.5
Ø781
Xm=6,55
Ø792 PCD
10°
VIEW ON 'A' SHOWING DRILLING PATTERN AND OTHER DETAILS
1 09NOV12 SUPERCEDES E 816 32 01 AA LM
GEAR DATA
BOLT DATA
QCB SLEWING RINGS
Orleton Lane, Wellington, Telford, TF1 2BG, England
Ph 01952 222300 Fax 01952 242938 www.nbcgroup.co.uk
SEG 816 32 01 AA LM

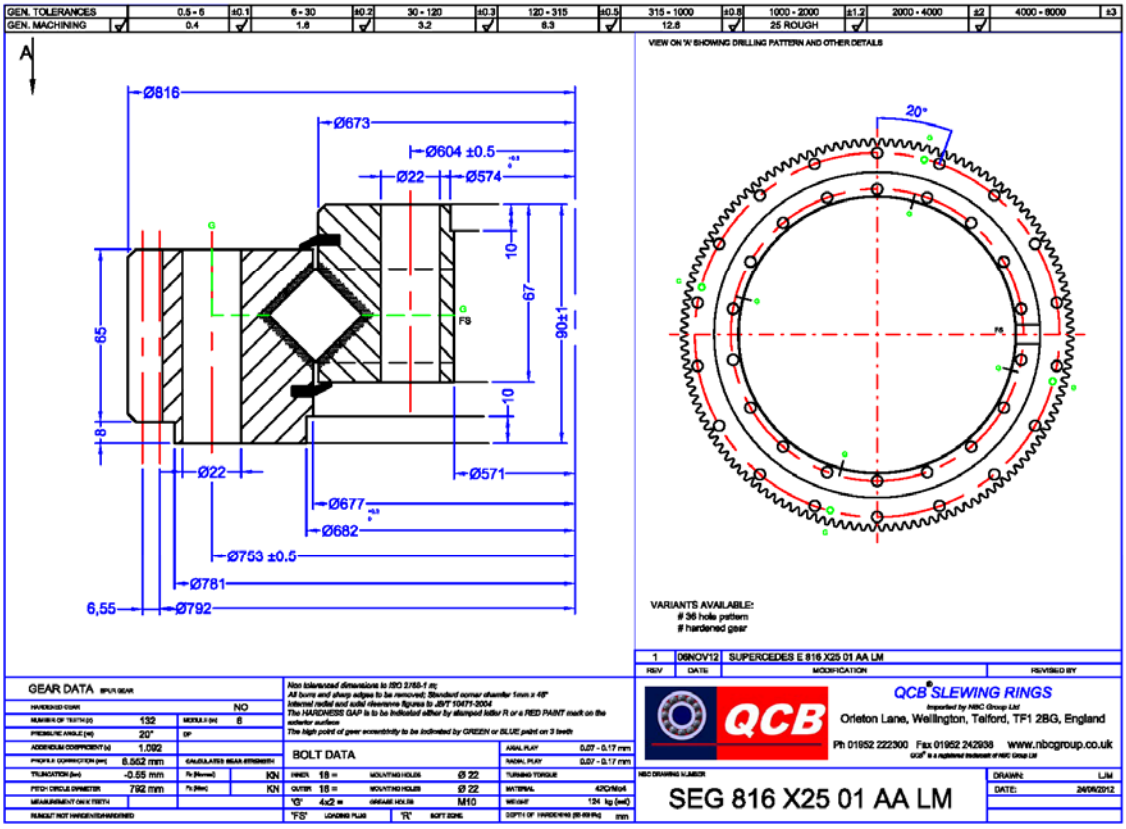
GEN. TOLERANCES
GEN. MACHINING
Ø816
Ø673
Ø604 ±0.5
Ø22
Ø574
10
67
90±1
65
8
10
Ø22
Ø571
Ø677
Ø682
Ø753 ±0.5
Ø781
6,55
Ø792
FS
VIEW ON 'A' SHOWING DRILLING PATTERN AND OTHER DETAILS
20°
VARIANTS AVAILABLE:
36 hole pattern
hardened gear
1 09NOV12 SUPERCEDES E 816 X25 01 AA LM
GEAR DATA
BOLT DATA
QCB SLEWING RINGS
Orleton Lane, Wellington, Telford, TF1 2BG, England
Ph 01952 222300 Fax 01952 242938 www.nbcgroup.co.uk
SEG 816 X25 01 AA LM

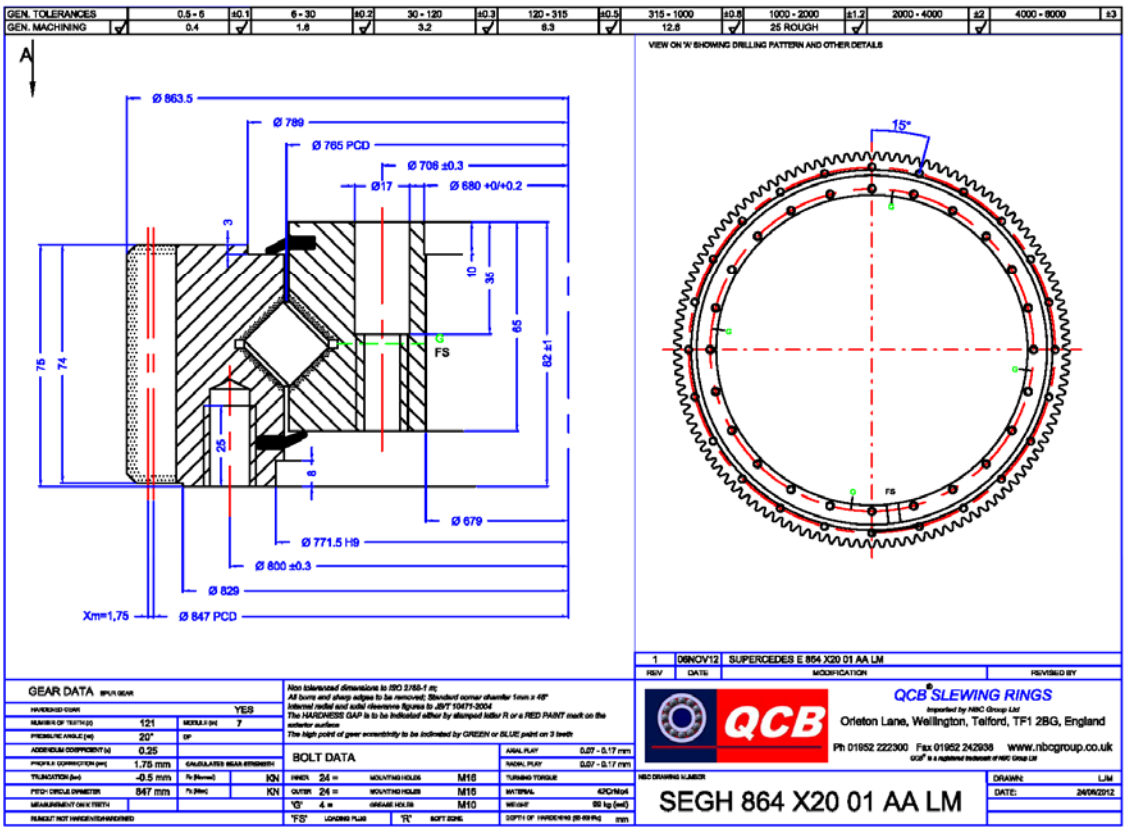
GEN. TOLERANCES
GEN. MACHINING
Ø 863.5
Ø 789
Ø 765 PCD
Ø 706 ±0.3
Ø17
Ø 680 +0/+0.2
3
10
35
65
82 ±1
75
74
25
8
FS
Ø 679
Ø 771.5 H9
Ø 800 ±0.3
Ø 829
Xm=1,75
Ø 847 PCD
VIEW ON 'A' SHOWING DRILLING PATTERN AND OTHER DETAILS
15°
1 09NOV12 SUPERCEDES E 864 X20 01 AA LM
GEAR DATA
BOLT DATA
QCB SLEWING RINGS
Orleton Lane, Wellington, Telford, TF1 2BG, England
Ph 01952 222300 Fax 01952 242938 www.nbcgroup.co.uk
SEGH 864 X20 01 AA LM

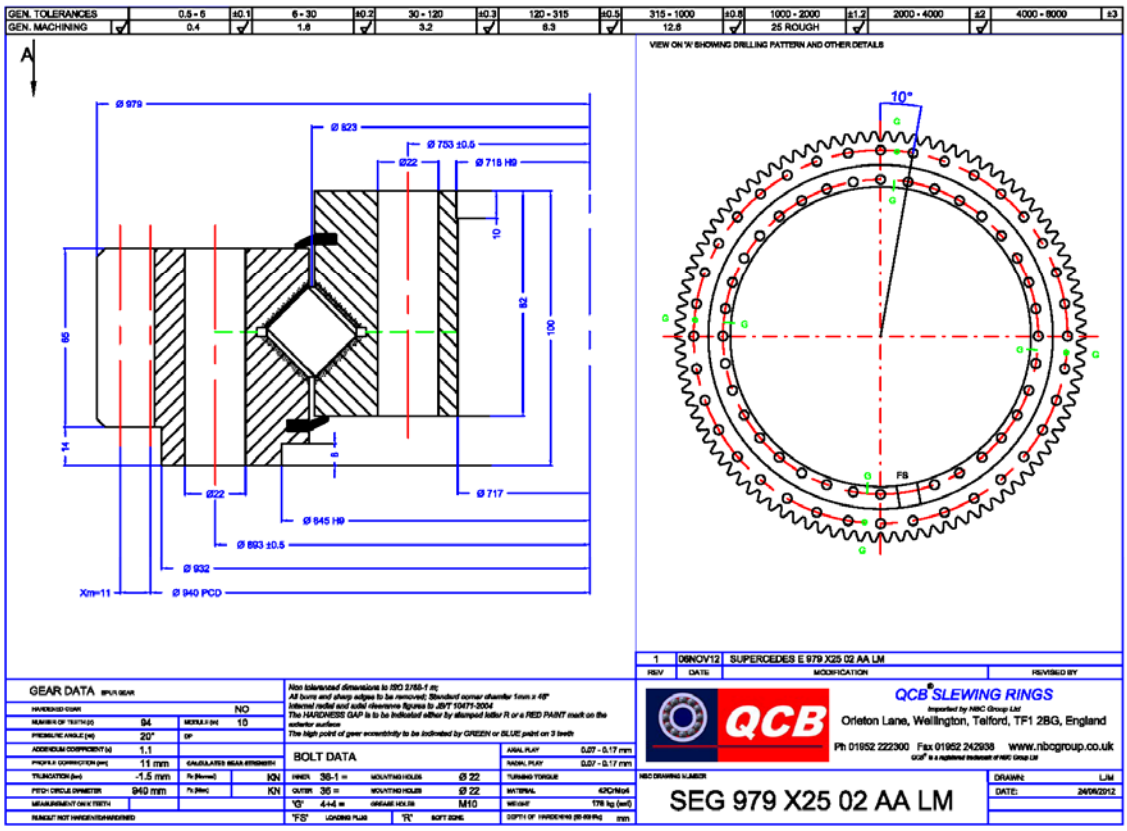
GEN. TOLERANCES
GEN. MACHINING
VIEW ON 'A' SHOWING DRILLING PATTERN AND OTHER DETAILS
Ø 979
Ø 823
Ø 753 ±0.5
Ø22
Ø 718 H9
Ø 717
Ø 945 H9
Ø 893 ±0.5
Ø 932
Ø 940 PCD
Xm=11
10°
FS
1 08NOV12 SUPERCEDES E 979 X25 02 AA LM
GEAR DATA
BOLT DATA
QCB SLEWING RINGS
Orleton Lane, Wellington, Telford, TF1 2BG, England
Ph 01952 222300 Fax 01952 242938 www.nbcgroup.co.uk
SEG 979 X25 02 AA LM

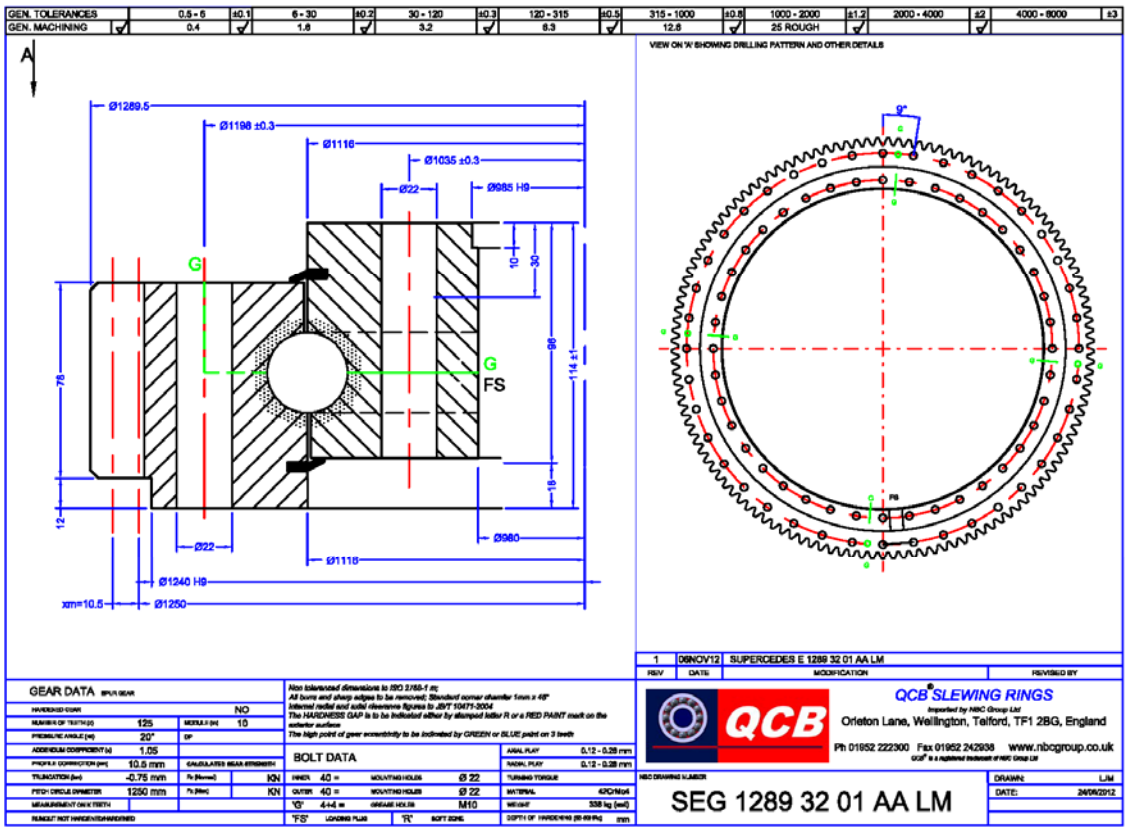
GEN. TOLERANCES
GEN. MACHINING
VIEW ON 'A' SHOWING DRILLING PATTERN AND OTHER DETAILS
Ø1289.5
Ø1198 ±0.3
Ø1116
Ø1035 ±0.3
Ø22
Ø985 H9
Ø1116
Ø1240 H9
Ø1250
Ø980
xm=10.5
9°
FS
1 08NOV12 SUPERCEDES E 1289 32 01 AA LM
GEAR DATA
BOLT DATA
QCB SLEWING RINGS
Orleton Lane, Wellington, Telford, TF1 2BG, England
Ph 01952 222300 Fax 01952 242938 www.nbcgroup.co.uk
SEG 1289 32 01 AA LM

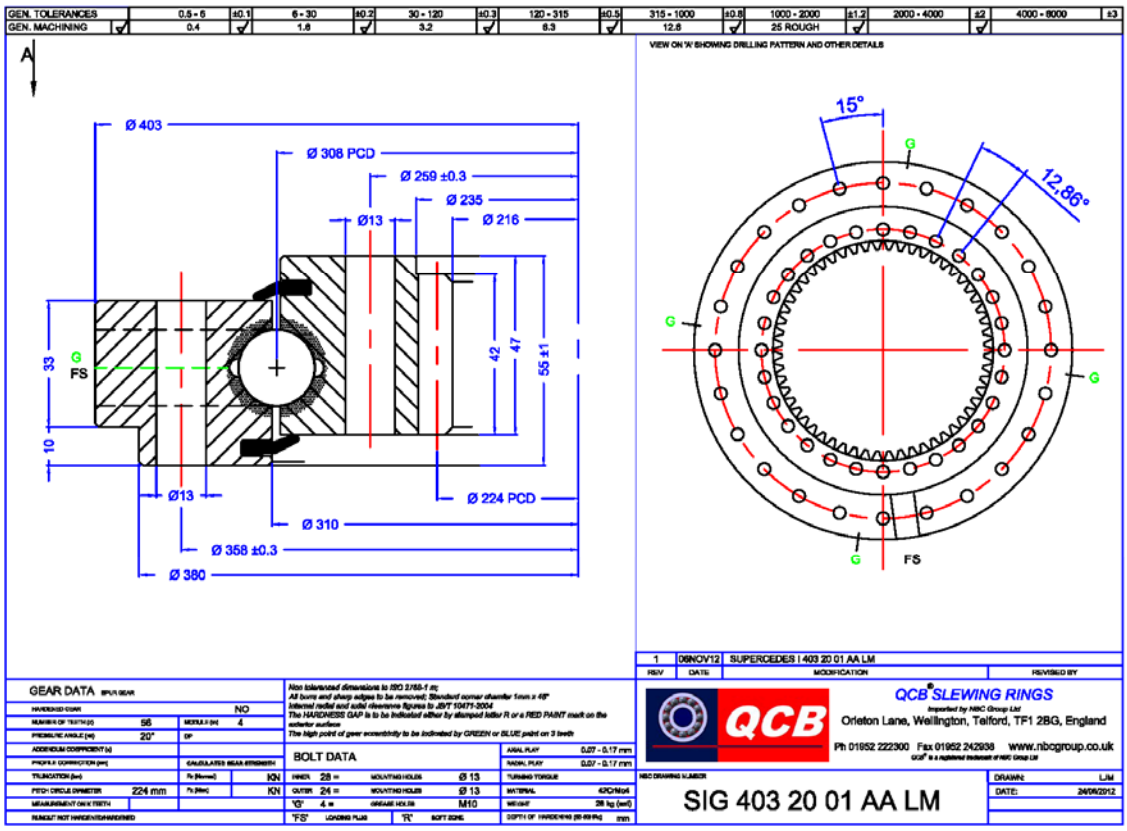
GEN. TOLERANCES
GEN. MACHINING
VIEW ON 'A' SHOWING DRILLING PATTERN AND OTHER DETAILS
Ø 403
Ø 308 PCD
Ø 259 ±0.3
Ø 235
Ø13
Ø 216
Ø 224 PCD
Ø 310
Ø 358 ±0.3
Ø 380
33
10
42
47
55 ±1
FS
15°
12,86°
1 08NOV12 SUPERCEDES I 403 20 01 AA LM
GEAR DATA
BOLT DATA
QCB SLEWING RINGS
Orleton Lane, Wellington, Telford, TF1 2BG, England
Ph 01952 222300 Fax 01952 242938 www.nbcgroup.co.uk
SIG 403 20 01 AA LM

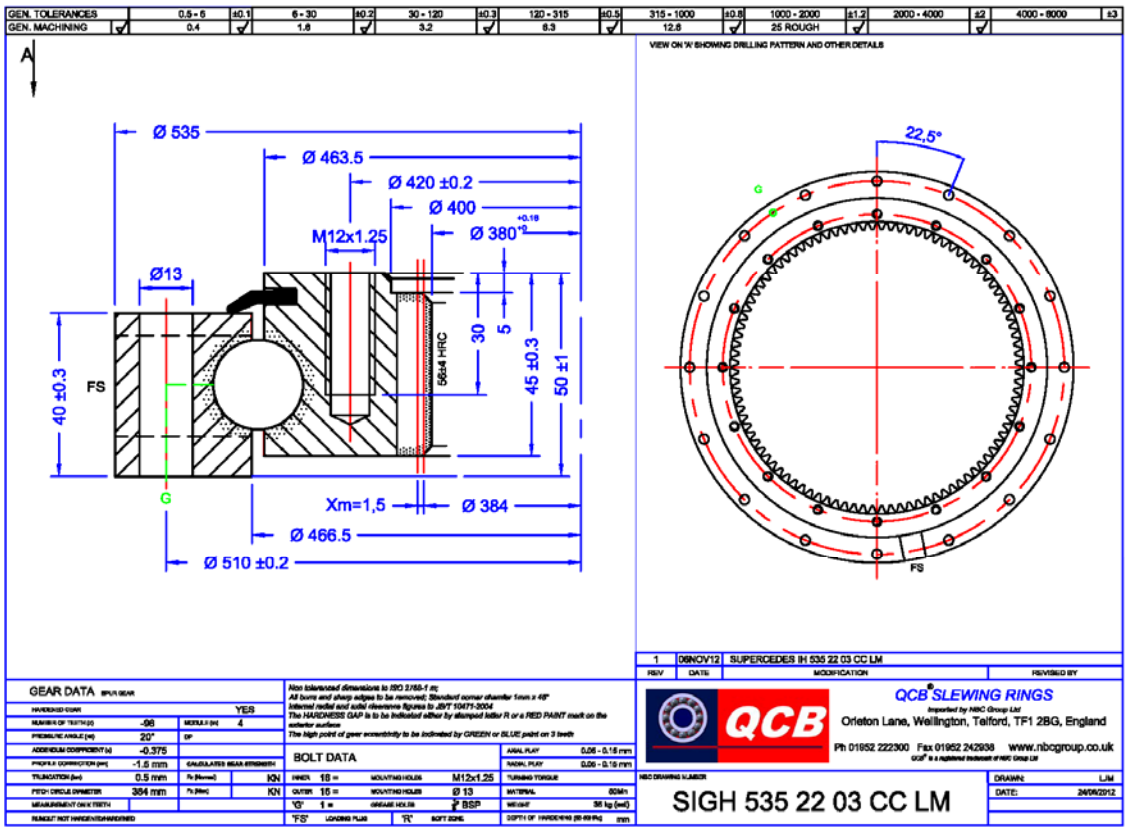
GEN. TOLERANCES
GEN. MACHINING
VIEW ON 'A' SHOWING DRILLING PATTERN AND OTHER DETAILS
Ø 535
Ø 463.5
Ø 420 ±0.2
Ø 400
M12x1.25
Ø 380
Ø13
40 ±0.3
FS
30
5
45 ±0.3
50 ±1
56±4 HRC
Xm=1,5
Ø 384
Ø 466.5
Ø 510 ±0.2
22,5°
1 08NOV12 SUPERCEDES IH 535 22 03 CC LM
GEAR DATA
BOLT DATA
QCB SLEWING RINGS
Orleton Lane, Wellington, Telford, TF1 2BG, England
Ph 01952 222300 Fax 01952 242938 www.nbcgroup.co.uk
SIGH 535 22 03 CC LM

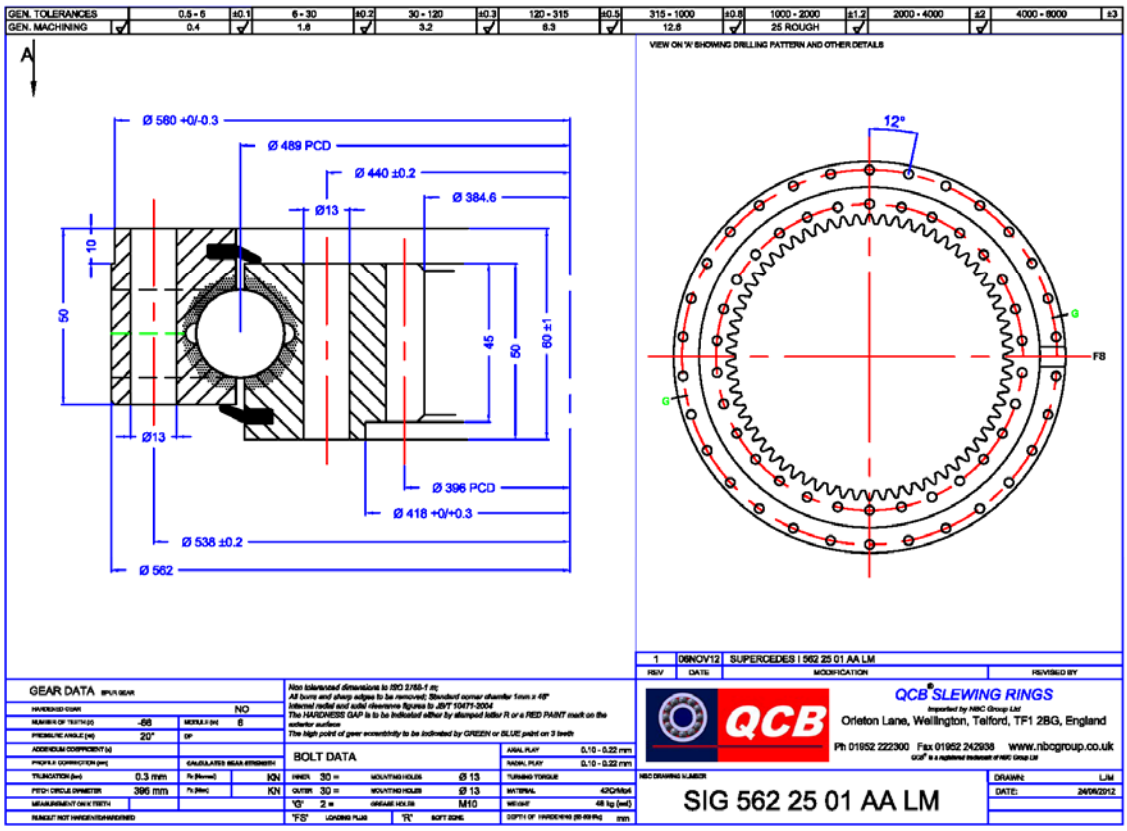
GEN. TOLERANCES
GEN. MACHINING
VIEW ON 'A' SHOWING DRILLING PATTERN AND OTHER DETAILS
Ø 560 +0/-0.3
Ø 489 PCD
Ø 440 ±0.2
Ø 384.6
Ø13
Ø 396 PCD
Ø 418 +0/+0.3
Ø 538 ±0.2
Ø 562
12°
FS
1 06NOV12 SUPERCEDES I 562 25 01 AA LM
GEAR DATA
BOLT DATA
QCB SLEWING RINGS
Orleton Lane, Wellington, Telford, TF1 2BG, England
Ph 01952 222300 Fax 01952 242938 www.nbcgroup.co.uk
SIG 562 25 01 AA LM

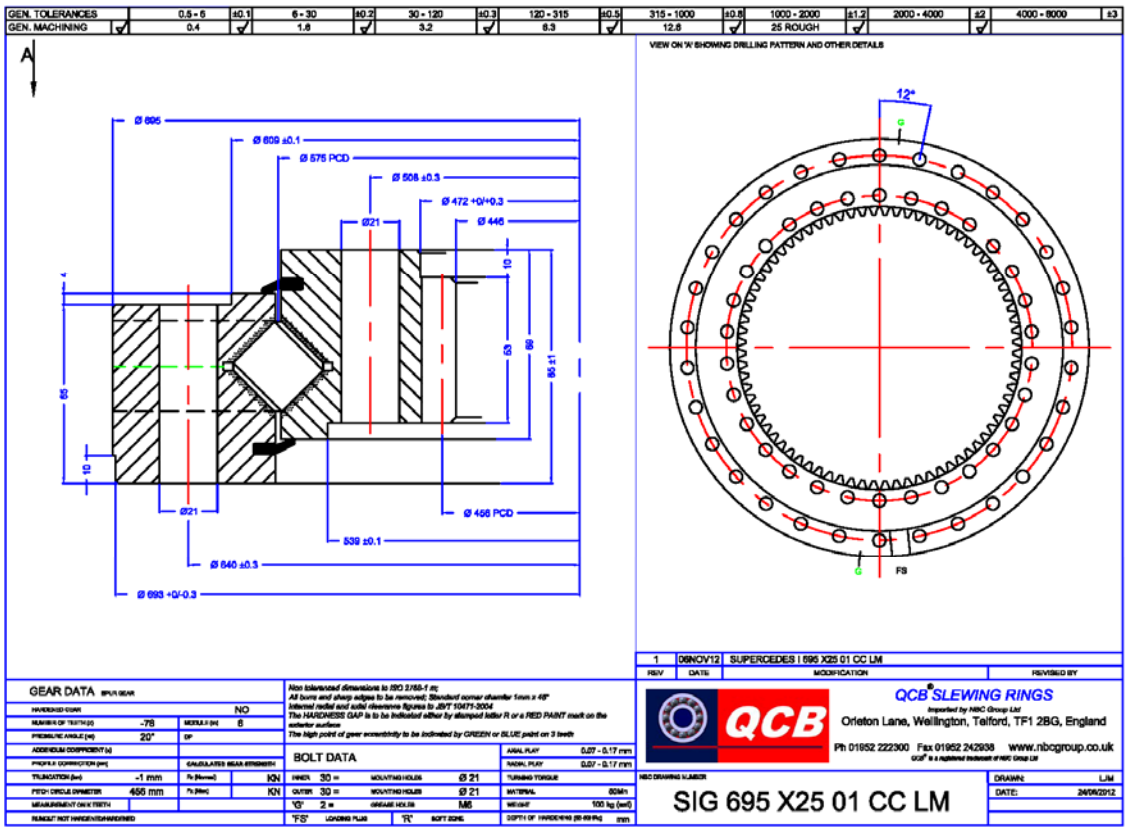
GEN. TOLERANCES
GEN. MACHINING
VIEW ON 'A' SHOWING DRILLING PATTERN AND OTHER DETAILS
Ø 695
Ø 609 ±0.1
Ø 575 PCD
Ø 508 ±0.3
Ø 472 +0/+0.3
Ø 446
Ø21
Ø 456 PCD
539 ±0.1
Ø 640 ±0.3
Ø 693 +0/-0.3
12°
FS
1 06NOV12 SUPERCEDES I 695 X25 01 CC LM
GEAR DATA
BOLT DATA
QCB SLEWING RINGS
Orleton Lane, Wellington, Telford, TF1 2BG, England
Ph 01952 222300 Fax 01952 242938 www.nbcgroup.co.uk
SIG 695 X25 01 CC LM

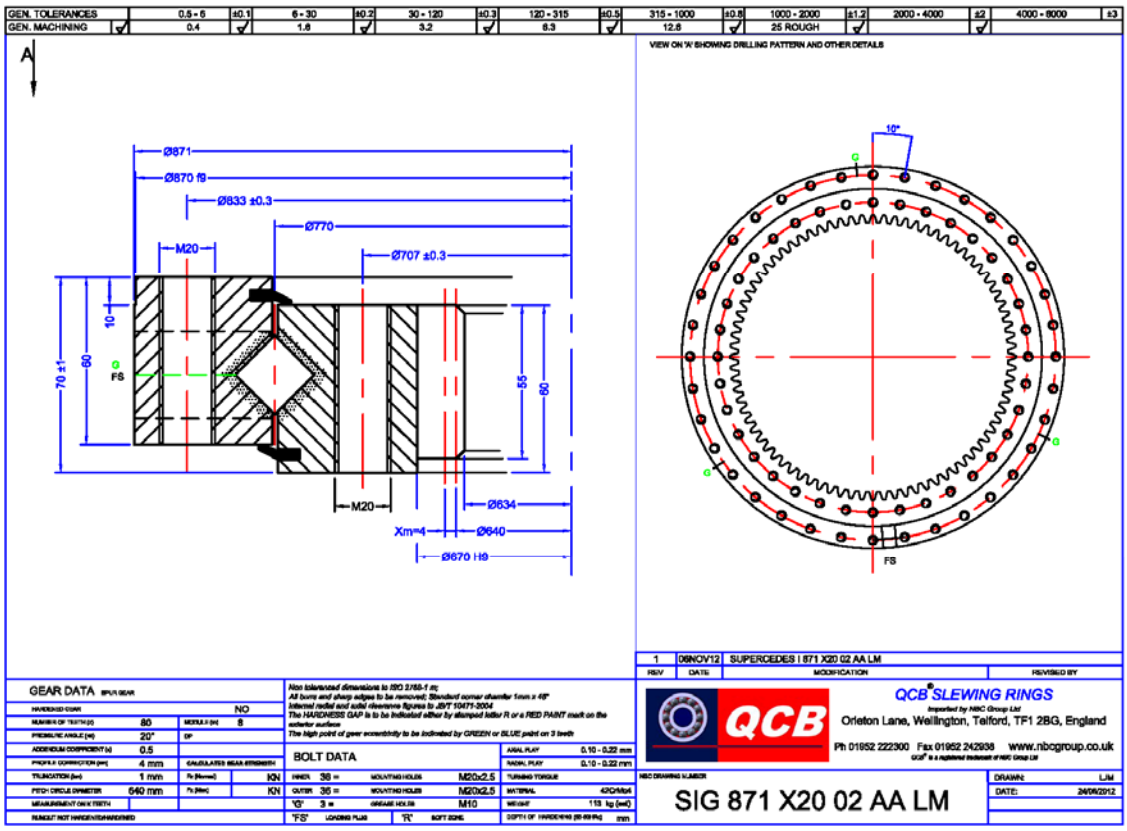
GEN. TOLERANCES
GEN. MACHINING
VIEW ON 'A' SHOWING DRILLING PATTERN AND OTHER DETAILS
Ø871
Ø870 f9
Ø833 ±0.3
Ø770
Ø707 ±0.3
M20
10
70 ±1
60
55
50
Ø634
Ø640
Ø670 H9
Xm=4
10°
FS
GEAR DATA
BOLT DATA
QCB SLEWING RINGS
Orleton Lane, Wellington, Telford, TF1 2BG, England
Ph 01952 222300 Fax 01952 242938 www.nbcgroup.co.uk
SIG 871 X20 02 AA LM

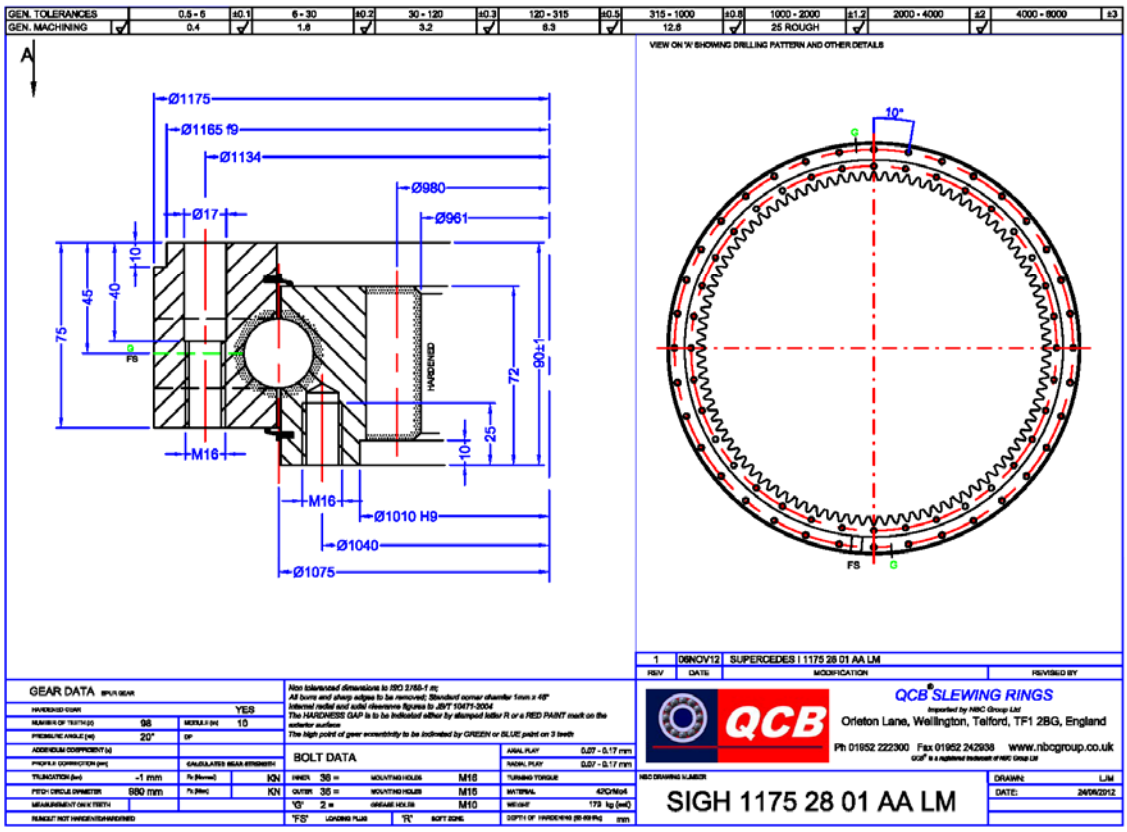
GEN. TOLERANCES
GEN. MACHINING
VIEW ON 'A' SHOWING DRILLING PATTERN AND OTHER DETAILS
Ø1175
Ø1165 f9
Ø1134
Ø980
Ø961
Ø17
10
45
40
75
72
90±1
25
HARDENED
M16
Ø1010 H9
Ø1040
Ø1075
10°
FS
GEAR DATA
BOLT DATA
QCB SLEWING RINGS
Orleton Lane, Wellington, Telford, TF1 2BG, England
Ph 01952 222300 Fax 01952 242938 www.nbcgroup.co.uk
SIGH 1175 28 01 AA LM

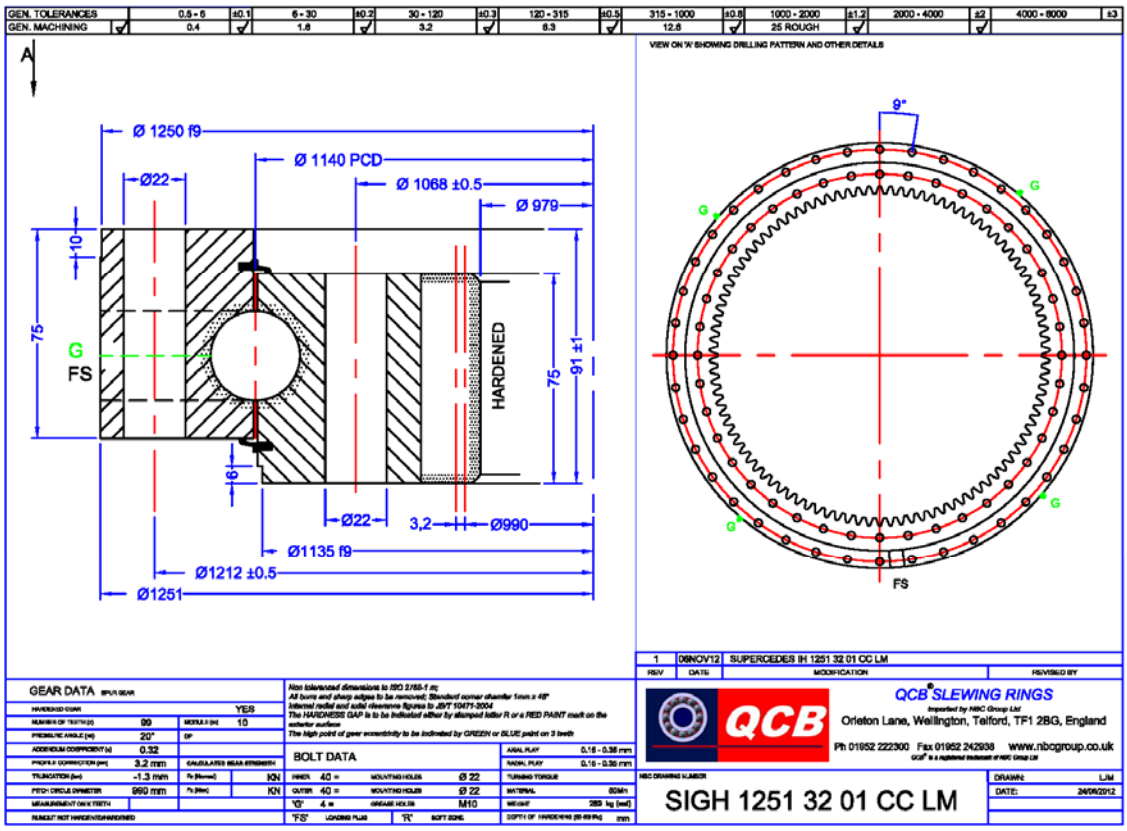
GEN. TOLERANCES
GEN. MACHINING
VIEW ON 'A' SHOWING DRILLING PATTERN AND OTHER DETAILS
Ø 1250 f9
Ø 1140 PCD
Ø 1068 ±0.5
Ø 979
Ø22
10
75
G
FS
HARDENED
91 ±1
6
3,2
Ø990
Ø1135 f9
Ø1212 ±0.5
Ø1251
9°
FS
1
08NOV12
SUPERCEDES IH 1251 32 01 CC LM
GEAR DATA
BOLT DATA
QCB SLEWING RINGS
Orleton Lane, Wellington, Telford, TF1 2BG, England
Ph 01952 222300 Fax 01952 242938 www.nbcgroup.co.uk
SIGH 1251 32 01 CC LM

TRAILER RINGS

NBC Group stock a range of trailer rings manufactured in Europe.

Intended for simple oscillatory movements on lightly loaded and slow speed trailers, they also find use in simple materials handling applications with light loading conditions due to economy in design.

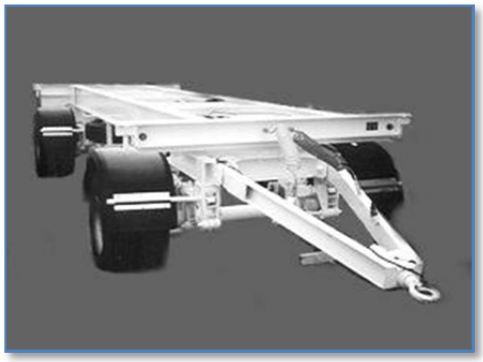

Trailer rings do not have hardened raceways and therefore cannot be considered a replacement for a slewing ring.

Trailer rings are supplied undrilled and only lightly greased.

It is important that they are properly greased during installation and service as they are unsealed. Good quality lithium or lithium-calcium EP2 grease will be adequate in most applications.

Trailer rings flanges should be at least 50% supported by a stiff frame, with the loading plug located away from the direction of any radial load.

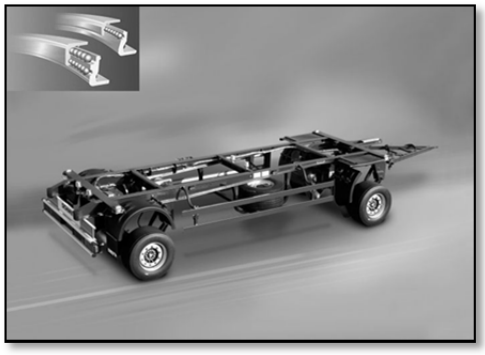

It's normal for 6 to 8 bolts to be added per flange, minimum size M12 to M16 (depending on diameter). Bolt torques should be checked monthly.

Metal tabs, welded to the frame, can be used to improve radial location.

Be aware that trailer rings are NOT precision bearings and dimensions such as overall height can vary by as much as 3mm, and diameters by as much as 5 – 8mm!

Trailer rings U Series

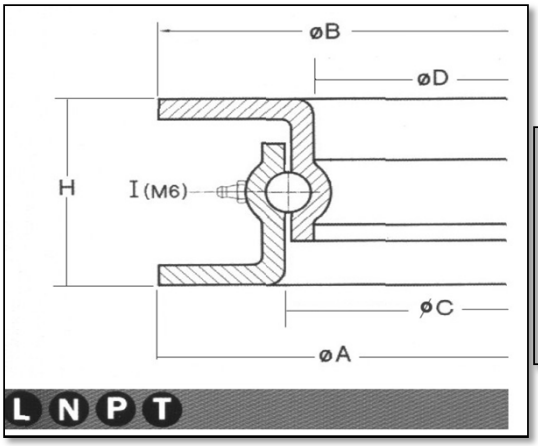

Series U trailer rings are suitable for heavy farm vehicle or light truck trailer applications (e.g. irrigation systems or airport luggage trailers) limited to speeds < 40 km/h (subject to load conditions).

Although greased during assembly, they should be greased again during installation with a lithium or lithium-calcium EP2 bearing grease.

Trailer rings are supplied undrilled. Support at least 50% of the flange area on flat, stiff supports and fix with Grade 8.8 bolts. Tabs to accommodate radial loads can be welded to the support structure.

Maintenance consists of monthly lubricant and bolt tightness checks.

NBC ref	Dimensions					Grease points	Ball ϕ	Mass	Axial load *1	Min no bolts/ Size
	H	A	B	C	D					
	(mm)	*(mm)*	*(mm)*	*(mm)*	*(mm)*		*(mm)*	*(kg)*	*KN*	
U01L030	55	298	293	220	200	1	12	5	5	4/ M12
U01L040	55	400	400	320	300	1	12	8	7.5	
U01L050	55	500	500	420	400	1	12	10	10	
U01N060	65	600	600	516	490	2	14	18	17	6/ M12 or M14
U01N065	65	650	650	568	543	2	14	20	17	
U01N070	65	700	700	620	594	2	14	22	22	
U01N075	65	750	750	668	640	2	14	24	22	
U01N080	65	800	800	718	690	2	14	26	25	6/ M14 or M16
U01N085	65	850	850	767	742	2	14	28	30	
U01N090	65	900	900	820	793	2	14	30	35	
U01N095	65	950	950	870	843	2	14	31	35	
U01N100	65	1000	1000	920	895	2	14	33	40	
U01N105	65	1050	1050	970	945	2	14	35	45	
U01N110	65	1100	1100	1010	988	2	14	40	45	
U01P090	80	890	895	795	766	2	16	36	50	6/ M14 or M16
U01P100	80	1010	1015	916	888	2	16	42	60	
U01P110	80	1100	1105	1005	976	2	16	45	65	
U01T100	90	1000	1008	889	856	2	20	60	80	8/ M14 or M16
U01T110	90	1100	1100	980	948	2	20	65	100	

Notes *1 *Loads applicable at speeds up to 25 km/h only*
At faster speeds load capacity decreases

Trailer rings Z Series

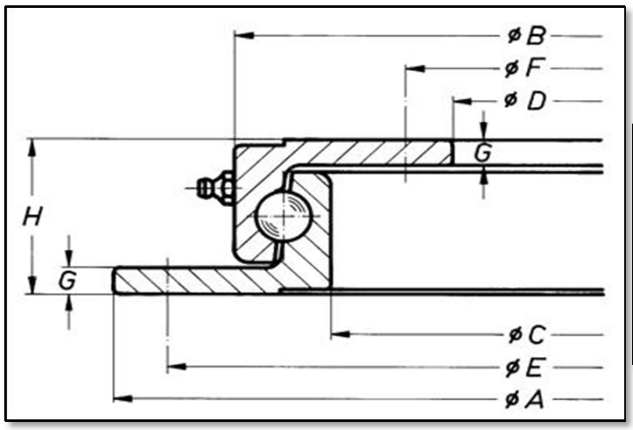

Series Z / L suitable for farm trailers at speeds < 30 km/h
Series Z/ N suitable for farm trailers at speeds in excess of 30 km/h

Although greased during assembly, they should be greased again during installation with a lithium or lithium-calcium EP2 bearing grease.

Trailer rings are supplied undrilled. Support at least 50% of the flange area on flat, stiff supports and fix with Grade 8.8 bolts. Tabs to accommodate radial loads can be welded to the support structure.

Maintenance consists of monthly lubricant and bolt tightness checks.

NBC Stock code	Dimensions								Weight	Axial load
	A	B	C	D	E	F	G	H *1		
	(mm)	*(mm)*	*(mm)*	*(mm)*	*(mm)*	*(mm)*	*(mm)*	*(mm)*	*(kg)*	*(kN)*
400L	400	342	292	230	375	260			11	7.5
500L	500	442	392	330	475	360			15	9
650L	650	592	542	480	625	510			20	15
750L	750	692	642	580	725	610	8	45	23	18
850L	850	792	742	680	825	710			27	25
950L	950	892	842	780	925	810			30	30
1050L	1050	992	942	880	1025	910			34	35
400N	400	338	281	215	375	260			15	14
500N	500	437	384	315	475	340			19	18
650N	650	587	534	465	625	490			25	25
750N	750	687	634	565	725	590	8	52	30	30
850N	850	787	734	665	825	690			35	35
950N	950	887	834	765	925	790			40	40
1050N	1050	987	934	865	1025	890			50	45

Notes *1 *The height tolerance is +/- 3mm - these are NOT precision units!*

Trailer rings are not suited for long life and continuously rotating applications

SLEW RING DESIGN DATA FORM

1a	**Customer**					Tel							
1b	Address					Fax							
1c	Contact					e-mail							
2a	**Project reference**					New project or replacement?		New		Rep			
2b													
3a	**Load data (include structural loads, but exclude safety factors)**					Loads Applied		Loads Suspended					
3b			Dynamic loads			Static loads							
3c	Load type(e.g. normal/ max/ test)		1	2	3	4	5	6					
3d	Axial load	KN											
3e	Radial load	KN											
3f	Moment load	KNm											
3g	Rotation Speed	rpm											
3h	%-age cycle time	Total 100%											
3i	Rotating ring	Inner		Outer									
3j	Has customer specified a raceway safety factor ?		Detail:										
3l	Oscillatory motion (Note: if the bearing moves "x" degrees off a centreline, 1 full oscillation defined as = "4x" degrees												
3m	Degrees off centreline		degrees		Time to swing "x" degrees		seconds						
3n	Rotation axis	Horizontal		Vertical		Inclined							
3o													
3p	Operation	Continuous		Intermittent		Other							
3k	Expected service life (i.e actual operation hours)												
4a	**Gear data**	External		Internal		Module							
4b	Number of teeth on geared ring					No. of pinions							
4c	Number of teeth on pinion gear					Speed ratio							
4d	Calculated torque on slewing ring		KNm			Tangential gear force / Geared ring		KN					
4e	Calculated torque on each pinion		KNm			Tangential gear force / pinion		KN					
5a	**Critical dimensions**	*(Kindly list any critical dimensions which must be considered in our selection)*											
5b													
5c													
5d													
5e													

Kindly fill in the required data and submit to **technical@nbcgroup.co.uk** or fax **+44 1952 242938**

A sketch would assist in our visualisation of your requirements. We have both CAD and 3D software available

NBC GROUP LTD Orleton Lane, Wellington, Telford, TF1 2BG, Shropshire, England

Ph: +44 (0) 1952 222300 Fax: +44 (0) 1952 242938 e-mail: technical@nbcgroup.co.uk Web: www.nbcgroup.co.uk